SERVICE INFORMATION

COACH # 4620
Vantare Model: HS2

Table of Contents:

Serial Number Log: # 4620

Mechanical Layouts:

Floor plan	0011
Elevations	0021
Bay layout	0051
Entertainment bay layout	0071
Ceiling frame layout	0301
Ceiling panel layout	0311
Ceiling lighting layout	0321
Airconditioning Layout	0611

Electrical Layouts:

DC Electrical Systems	651
AC Electrical Systems	652
Bay Electrical Systems	653
Roof Configurations	654
Switch Configurations	655
Audio Visual Systems	004
DC Relay Panel Layout	5200002
Bay AC MDP Layout	5200017
Ass'y Upstairs Breaker Switch	5200018

Lists:

DC circuit breaker list	929....
AC circuit breaker list	930....
DC wire list	922....
AC wire list	920....
AV wire list	...0007
Phone list	...0009

DC Circuit Schematics:

DC Relay Panel	9060005
Trailer/Tow Vechical Wiring	9060006
Schematic,Single Alternator,Bus, A/C	9060007
Somfy Shade Board Wiring	9060014
42" Plasma with pwr cutoff	9060022
12/24 Dual Alternator	9060026
Block Diagram AC Load Center	9060027
Shore,Gen,Inverter,Bay MDP	9060030
Bay MDP Module	9060039
Battery Charger,Dis Relay	9060040
Aqua-Hot System	9060041
Phone Interconnect Layout	9060052
Slide-out Wiring Diagram	9060067

Operator's Manual

Electric Slide-Out System	OM-03 Rev. A
Leveling System	OM-04 Rev. A

Coach # 4620 SANIBEL I NON-BUS AIR
Date:7/30/03

SERIAL LOG

REV: -
Engineer: KSL

Part No.	Description	Manufacturer	Model No.	Serial No.
1120010	Evaporator	CruiseAir/AAP	EBS 16S	G030020
1120010	Evaporator	CruiseAir/AAP	EBS 16S	G030026
1120010	Evaporator	CruiseAir/AAP	EBS 16S	G030025
1120015	Evaporator	CruiseAir/AAP	EBU 16	F030001
1120030	Condensing Unit	CruiseAir/AAP	ACH 14B	F030020
1120030	Condensing Unit	CruiseAir/AAP	ACH 14B	H030008
1120030	Condensing Unit	CruiseAir/AAP	ACH 14B	F030021
4700001	Condensing Unit	CruiseAir/AAP	ACH 14HB	H030006
1120040	Control Module	CruiseAir/AAP	SMX II	G03A
1120040	Control Module	CruiseAir/AAP	SMX II	G03A
1120040	Control Module	CruiseAir/AAP	SMX II	G03A
1120040	Control Module	CruiseAir/AAP	SMX II	G03A
1120060	Power Logic Module	CruiseAir/AAP	PLM 25	H030009
1120060	Power Logic Module	CruiseAir/AAP	PLM 25	H030004
1120060	Power Logic Module	CruiseAir/AAP	PLM 25	H030005
1120060	Power Logic Module	CruiseAir/AAP	PLM 25	H030006
1120251	Aqua-Hot Heating System	Vehicle Systems	N/A	03-860
1140062	Refrigerator Bisque	Jennaire	JCD2389GEQ	22303206CR
1140010	Freezer	Norcold	MRFT-460	PPN-0059
1140091	Cook Top	Kenyon	B41515	2243-1100
1140096	Coffeemaker (blk)	Krups	453	F4534C56/860-13033
1440085	Insta-hot (Brass)	Everhot	LVH-500	LRM4314950
1140602	Dryer - White	Malber	TD700	20030500171
1140702	Washer- White	Malber	P21	20031501288
1140851	Microwave-Almond	G.E.	SCA1000DCC	LF901426K
1150034	Ground Loop Isolator	N/A	N/A	21462
1150034	Ground Loop Isolator	N/A	N/A	51466
1150057	LCD Monitor 10.4" color	Computer Dynamics	Vamp-Xga	82772681
1150080	Video Intercom	A1 Phone	MKS-1E/A	N/A
1150115	CB Radio	Cobra-29	29WXNWST	G15307122801
1150141	Current Sensing Outlet Switch	Niles	ACP-2	00254A000032030004
1150162	Audio/Video A/B switch	Niles	AVS-2	00241A000031600009
1150185	Satellite Receiver	Sony	A-65	GB5E6B0F8069
	Card #			0009-1830-7265
1150185	Satellite Receiver	Sony	A-65	GB5E6B0F808D
	Card #			009-1832-2512
1150225	K40w/laser	K-40	SS715LWB5	N/A
1150430	VCR	Sony	SLV-N71/BM	S01-0257915-L
1150430	VCR	Sony	SLV-N71/BM	S01-0259873-K
1150433	DVD Player	Sony	DVP-S360	S01-6082010-3
1150504	TUNER. X.M.	Pioneer	GEXP900X	CFTM004746UC
1150505	Bose Lifestyle 35 -	Bose	See Below	
	Music Center	Bose	CDM20	029472932680184AC
1150520	Aft Subwoofer	Bose	AM5	025972932050016AS
1150506	Pioneer 4" Speakers	Pioneer	TSA-1057	N/A
1150507	Pioneer Distribution Amp	Pioneer	VB-1	N/A

Coach # 4620 SANIBEL I NON-BUS AIR
Date:7/30/03

SERIAL LOG

REV: -
Engineer: KSL

Part No.	Description	Manufacturer	Model No.	Serial No.
1150508	Bay Radio	Pioneer	DEH-P7400MP	CBTM024842UC
1150509	Pioneer cable input aux	Pioneer	N/A	N/A
1150510	Pioneer CD Changer	Pioneer	CDXP670	BJTM000791UC
1150511	Navigational System, GPS, DVD	Pioneer	AVIC9DVD	CDMH002325UC
1150513	DVD Player 7" Display	Pioneer	AVHP7480	CFMD014405UC
1150514	ANTENNA	Pioneer	AN-90XM	N/A
1262009	Inverter	Trace Engineering	SW-4024	A10030072
1262009	Inverter	Trace Engineering	SW-4024	A10030075
1350023	Generator 120 VAC w/elec gov	Kubota	PT-17.5 SI	KTA40DHC6491VAN
1440800	Water Pump	Headhunter	Mach 5	0303003245F
1460910	Fiber Optic Illuminator	SuperVision	SV1500	025369
1460910	Fiber Optic Illuminator	SuperVision	SV1500	025632
3740001	Battery Equalizer	Vanner	60-100	03223-128491
3740003	Battery Monitor	Vanner	EM70 0D	03216-123284
4780001	View point remote	AMX	VPT-CS	5964418S2431379
4780001	Viewpoint remote	AMX	VPT-CS	5964418S1230910
4790003	Dual LNB Satellite System	KVH	01-0225-0299560	03081094
4830004	42" Plasma Monitor	Fujitsu	P42VCA21UH	3000530
4830004	42" Plasma Monitor	Fujitsu	P42VCA21UH	3000570
4850005	12VDC Power supply	Phoenix	120AC/12DC/10/F	D00126780311000964
4850005	12VDC Power supply	Phoenix	120AC/12DC/10/F	D00126780311000973
4860004	Matrix Switcher	Knox	RS 8X8HB	200204091411-093
4860008	Controller	AMX	Accent3	595520S19321103
4880002	Color Video Camera	Total Vision	FUC083100	TVI-249-073101
4900004	Telephone,2.4GHz	Siemens	SC242001CCS	N/A
4900005	Telephone,2.4GHz, extra hands	Siemens	AX2400KIT	N/A
5300085	VGA Cable		EVNPSO5	N/A

NOTE — INTERPRET ALL DRAWINGS IN ACCORDANCE WITH ANSI Y14.5-1982
1 REMOVE ALL SHARP EDGES

REVISIONS			
REV.	DESCRIPTION	DATE	APPROVAL
A			
B			
C			
D			

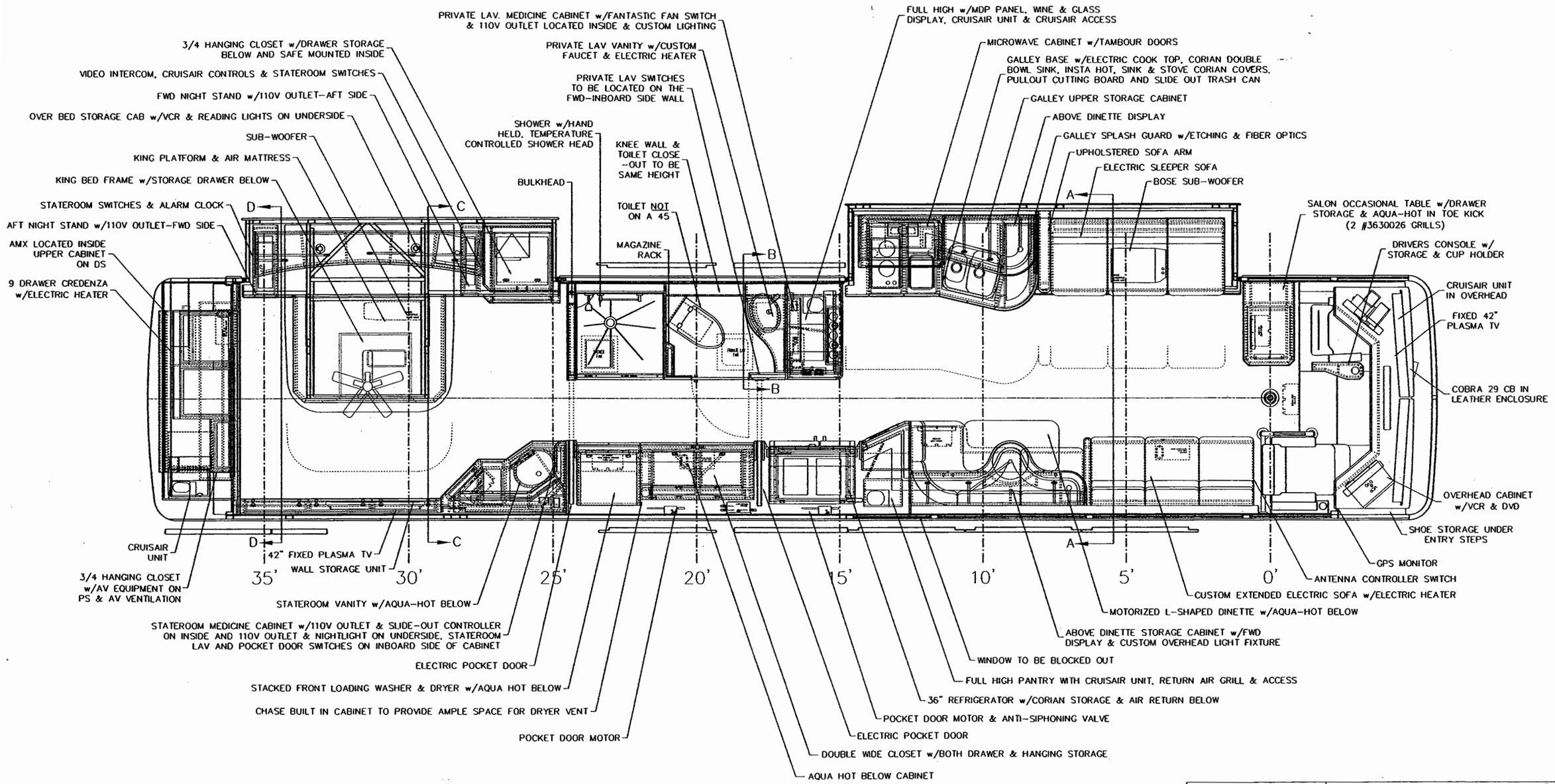

HARDWARE BILL OF MATERIAL

THIRD ANGLE PROJECTION

DO NOT SCALE DRAWING

TOLERANCES UNLESS OTHERWISE SPECIFIED:
ANGLES: ± 1/4°
FRACTIONS: ±1/64
DECIMALS: XX ±.010
DECIMALS: XXX ±.005

CUSTOMER NAME: MODEL COACH – SANIBEL I
CUSTOMER APPROVAL & DATE:

DWG. BY L.M. SIMMONS
CHK. BY BH
ENGR. BY
CHASIS: H3-45-S2-S
DATE : 6/27/03

PROPRIETARY NOTICE:
THIS DOCUMENT AND THE INFORMATION DISCLOSED ARE CONFIDENTIAL AND PROPRIETARY TO FEATHERLITE. DISCLOSURE OF SUCH INFORMATION IS EXPRESSLY FORBIDDEN WITHOUT OUR PRIOR WRITTEN PERMISSION

FEATHERLITE
1601 DOLGNER PL
SANFORD FLA 32771
TEL. 1-407-323-1120 FAX 1-407-323-1945

TITLE: FLOORPLAN

SCALE:
DRAWING NO.: 46200011
REV ---
DRAWING FILE # NONE
SHEET: 1 OF 1

NOTE — INTERPRET ALL DRAWINGS IN ACCORDANCE WITH ANSI Y14.5-1982
1 REMOVE ALL SHARP EDGES

REVISIONS			
REV.	DESCRIPTION	DATE	APPROVAL
A			
B			
C			
D			

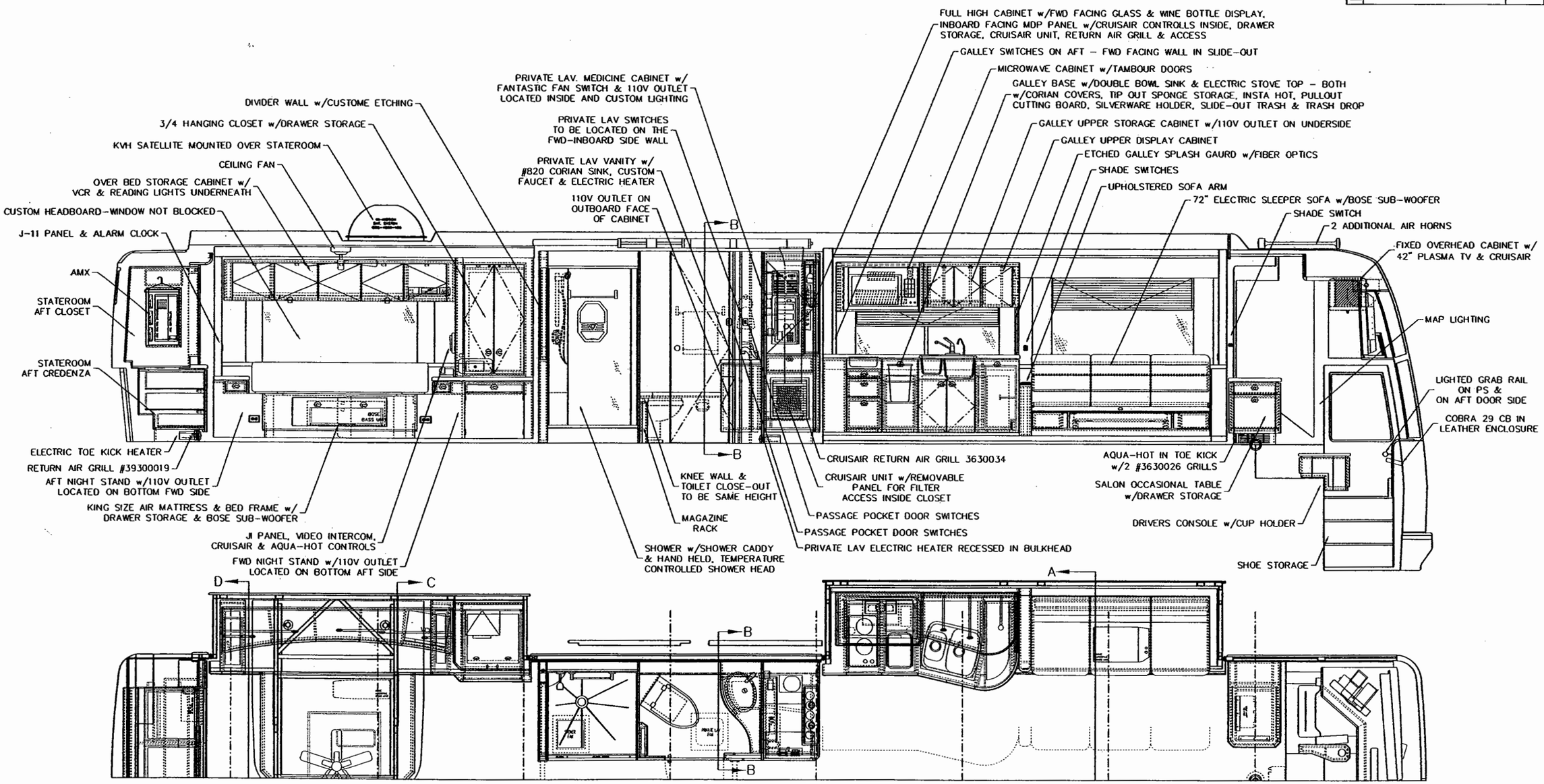

HARDWARE BILL OF MATERIAL

CUSTOMER NAME: MODEL COACH – SANIBEL I
CUSTOMER APPROVAL & DATE:

THIRD ANGLE PROJECTION
DO NOT SCALE DRAWING
TOLERANCES UNLESS OTHERWISE SPECIFIED:
ANGLES: ± 1/4°
FRACTIONS: ±1/64
DECIMALS: XX ±.010
DECIMALS: XXX ±.005

DWG. BY L.M. Simmons
CHK. BY
ENGR. BY
CHASIS: H3-45-S2-S
DATE : 6/27/03

PROPRIETARY NOTICE:
THIS DOCUMENT AND THE INFORMATION DISCLOSED ARE CONFIDENTIAL AND PROPRIETARY TO FEATHERLITE. DISCLOSURE OF SUCH INFORMATION IS EXPRESSLY FORBIDDEN WITHOUT OUR PRIOR WRITTEN PERMISSION

FEATHERLITE
1601 DOLGNER PL
SANFORD FLA 32771
TEL. 1-407-323-1120 FAX 1-407-323-1945

TITLE:
ELEVATIONS
-DRIVER SIDE-

SCALE:
DRAWING NO.: 46200021
REV ---
DRAWING FILE # NONE
SHEET: 1 OF 6

NOTE — INTERPRET ALL DRAWINGS IN ACCORDANCE WITH ANSI Y14.5-1982
1 REMOVE ALL SHARP EDGES

REVISIONS			
REV.	DESCRIPTION	DATE	APPROVAL
A			
B			
C			
D			

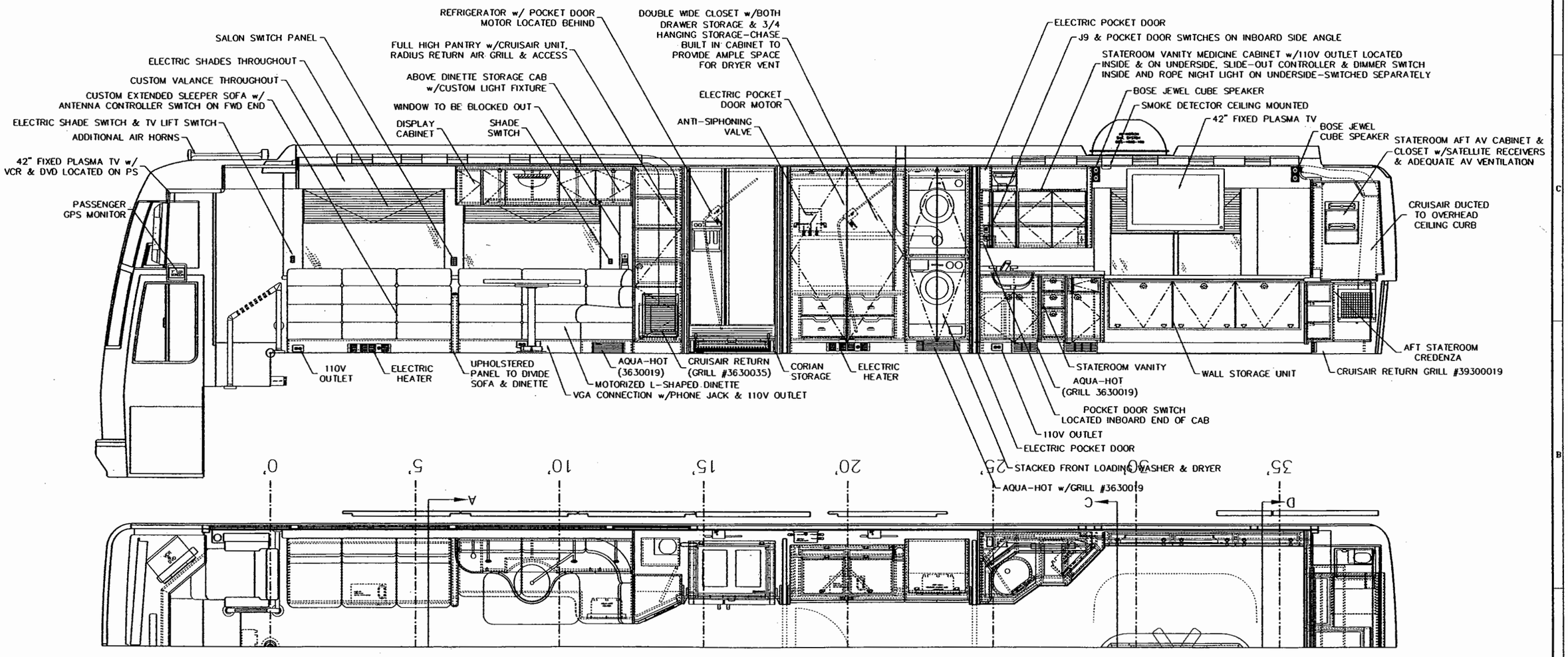

HARDWARE BILL OF MATERIAL

CUSTOMER NAME: MODEL COACH - SANIBEL I

CUSTOMER APPROVAL & DATE:

THIRD ANGLE PROJECTION

DO NOT SCALE DRAWING

TOLERANCES UNLESS OTHERWISE SPECIFIED:
ANGLES: ± 1/4°
FRACTIONS: ±1/64
DECIMALS: XX ±.010
DECIMALS: XXX ±.005

DWG. BY L.M. Simmons

CHK. BY

ENGR. BY

CHASIS: H3-45-S2-S

DATE : 6/27/03

PROPRIETARY NOTICE:

THIS DOCUMENT AND THE INFORMATION DISCLOSED ARE CONFIDENTIAL AND PROPRIETARY TO FEATHERLITE. DISCLOSURE OF SUCH INFORMATION IS EXPRESSLY FORBIDDEN WITHOUT OUR PRIOR WRITTEN PERMISSION

FEATHERLITE
1601 DOLGNER PL
SANFORD FLA 32771
TEL. 1-407-323-1120 FAX 1-407-323-1945

TITLE:

ELEVATIONS
-PASSENGER SIDE-

SCALE:

DRAWING NO.: 46200021

REV ---

DRAWING FILE # NONE

SHEET: 2 OF 6

FORM 1004-062094

NOTE — INTERPRET ALL DRAWINGS IN ACCORDANCE WITH ANSI Y14.5-1982
1 REMOVE ALL SHARP EDGES

REVISIONS			
REV.	DESCRIPTION	DATE	APPROVAL
A			
B			
C			
D			

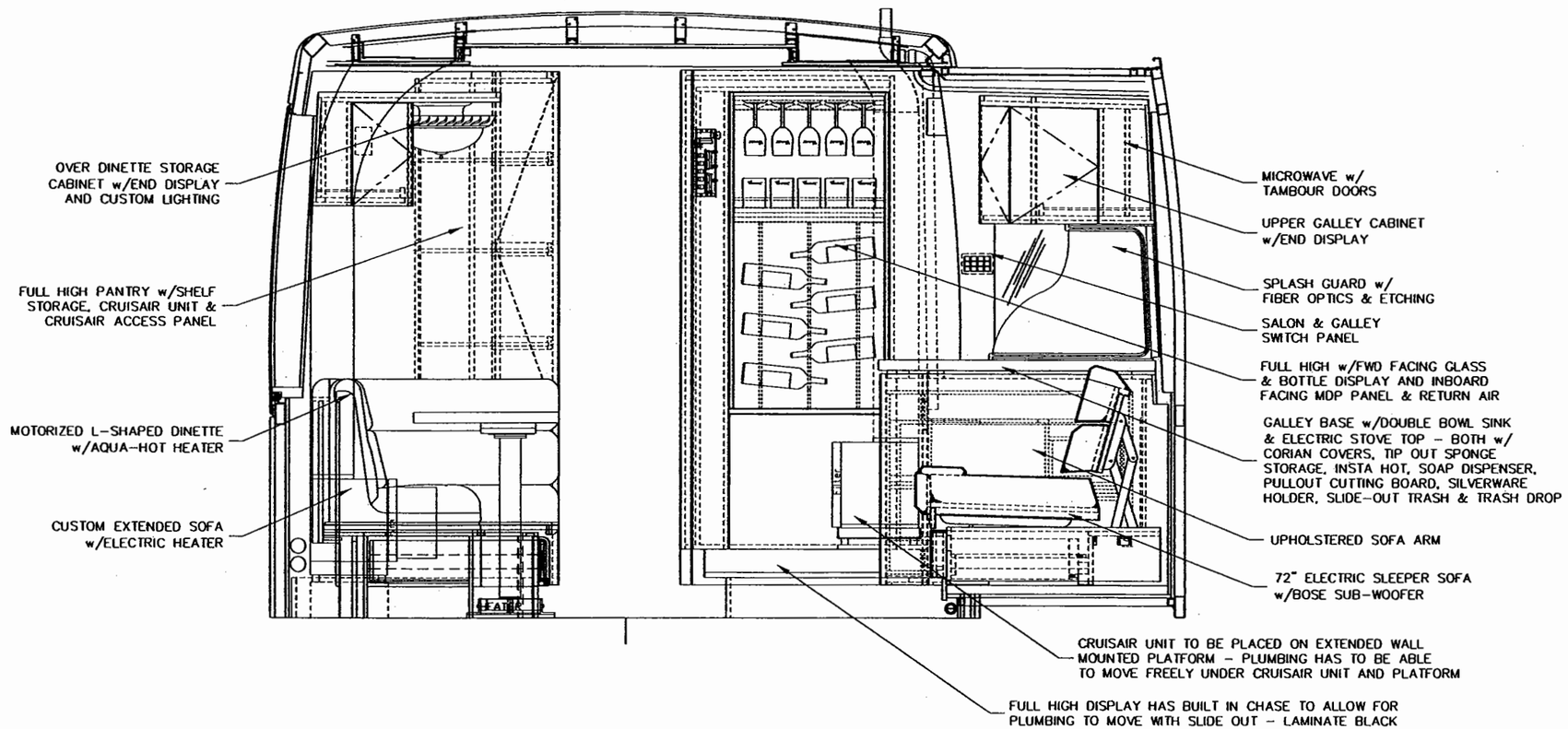

SECTION A_A
VIEW OF GALLEY
LOOKING AFT

HARDWARE BILL OF MATERIAL

CUSTOMER NAME: MODEL COACH - SANIBEL I
CUSTOMER APPROVAL & DATE:

THIRD ANGLE PROJECTION
DO NOT SCALE DRAWING
TOLERANCES UNLESS OTHERWISE SPECIFIED:
ANGLES: ± 1/4°
FRACTIONS: ±1/64
DECIMALS: XX ±.010
DECIMALS: XXX ±.005

DWG. BY L.M. Simmons
CHK. BY
ENGR. BY
CHASES: H3-45-S2-S
DATE : 6/27/03

PROPRIETARY NOTICE:
THIS DOCUMENT AND THE INFORMATION DISCLOSED ARE CONFIDENTIAL AND PROPRIETARY TO FEATHERLITE. DISCLOSURE OF SUCH INFORMATION IS EXPRESSLY FORBIDDEN WITHOUT OUR PRIOR WRITTEN PERMISSION

FEATHERLITE
1601 DOLGNER PL
SANFORD FLA 32771
TEL. 1-407-323-1120 FAX 1-407-323-1945

TITLE:
ELEVATIONS
-GALLEY-

SCALE:
DRAWING NO.: 46200021
REV ---
DRAWING FILE # NONE
SHEET: 3 OF 6

NOTE — INTERPRET ALL DRAWINGS IN ACCORDANCE WITH ANSI Y14.5-1982
1 REMOVE ALL SHARP EDGES

REVISIONS			
REV.	DESCRIPTION	DATE	APPROVAL
A			
B			
C			
D			

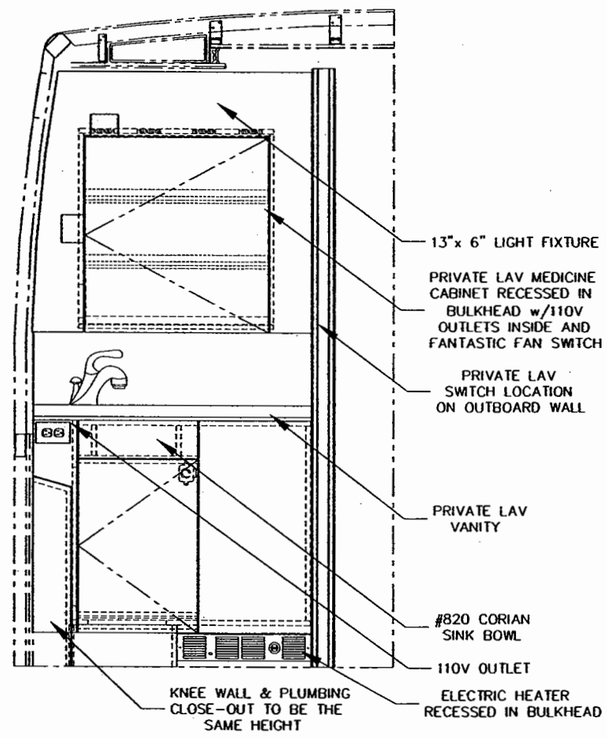

SECTION B B
VIEW OF PRIVATE LAV
LOOKING FWD

HARDWARE BILL OF MATERIAL

CUSTOMER NAME: MODEL COACH - SANIBEL I
CUSTOMER APPROVAL & DATE:

THIRD ANGLE PROJECTION
DO NOT SCALE DRAWING
TOLERANCES UNLESS OTHERWISE SPECIFIED:
ANGLES: ± 1/4°
FRACTIONS: ±1/64
DECIMALS: XX ±.010
DECIMALS: XXX ±.005

DWG. BY L.M. Simmons
CHK. BY
ENGR. BY
CHASIS: H3-45-S2-S
DATE : 6/27/03

PROPRIETARY NOTICE:
THIS DOCUMENT AND THE INFORMATION DISCLOSED ARE CONFIDENTIAL AND PROPRIETARY TO FEATHERLITE. DISCLOSURE OF SUCH INFORMATION IS EXPRESSLY FORBIDDEN WITHOUT OUR PRIOR WRITTEN PERMISSION

FEATHERLITE
1601 DOLGNER PL
SANFORD FLA 32771
TEL. 1-407-323-1120 FAX 1-407-323-1945

TITLE:
ELEVATIONS
-PRIVATE LAV-

SCALE:
DRAWING NO.: 46200021
REV ---
DRAWING FILE # NONE
SHEET: 4 OF 6

NOTE — INTERPRET ALL DRAWINGS IN ACCORDANCE WITH ANSI Y14.5-1982
1 REMOVE ALL SHARP EDGES

REVISIONS			
REV.	DESCRIPTION	DATE	APPROVAL
A			
B			
A			
B			

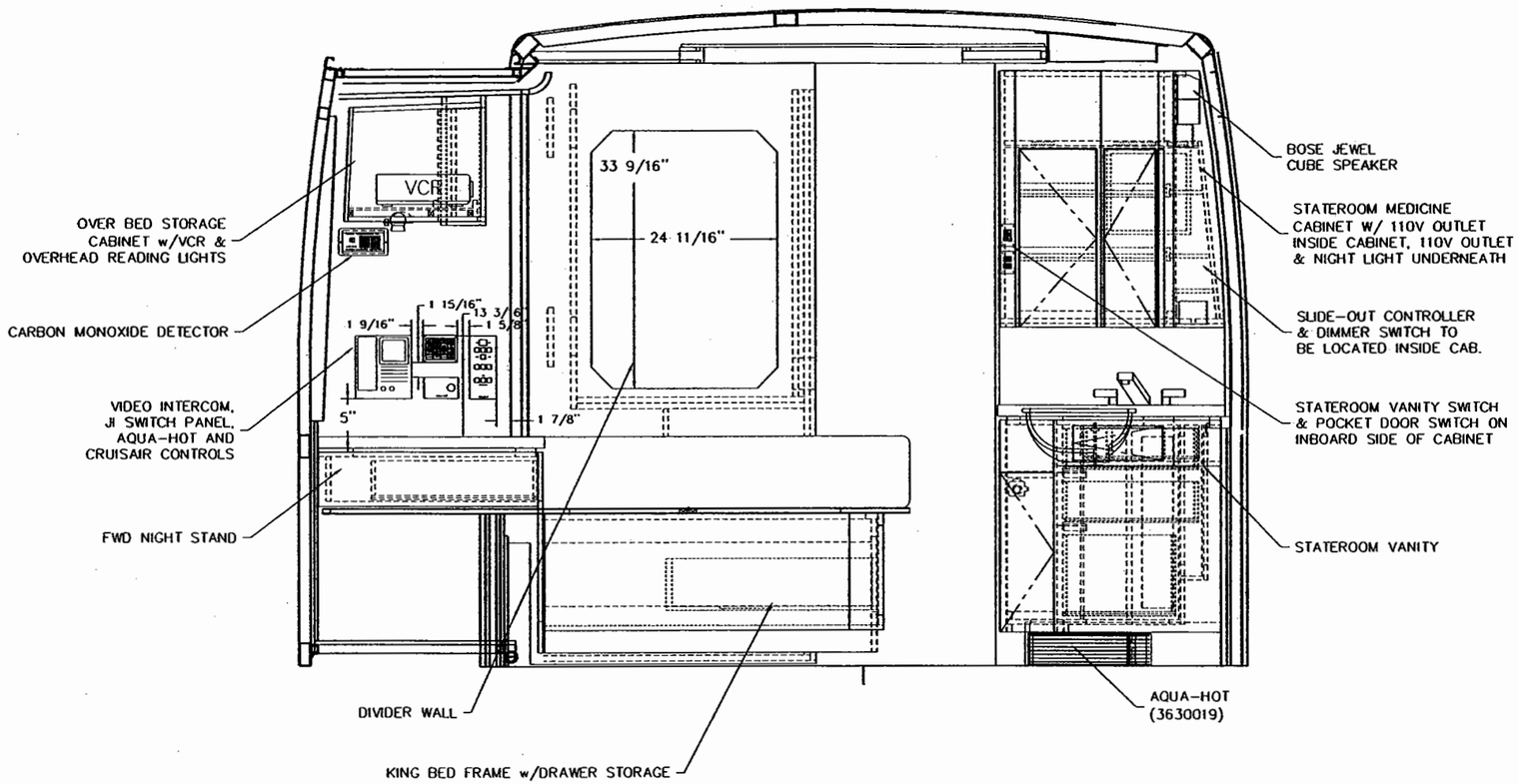

SECTION C_C
VIEW OF STATEROOM LOOKING FWD

HARDWARE BILL OF MATERIAL

CUSTOMER NAME: MODEL COACH - SANIBEL I
CUSTOMER APPROVAL & DATE:

THIRD ANGLE PROJECTION
DO NOT SCALE DRAWING
TOLERANCES UNLESS OTHERWISE SPECIFIED:
ANGLES: ± 1/4°
FRACTIONS: ±1/64
DECIMALS: XX ±.010
DECIMALS: XXX ±.005

DWG. BY L.M. Simmons
CHK. BY
ENGR. BY
CHASIS: H3-45-S2-S
DATE : 6/27/03

PROPRIETARY NOTICE:
THIS DOCUMENT AND THE INFORMATION DISCLOSED ARE CONFIDENTIAL AND PROPRIETARY TO FEATHERLITE. DISCLOSURE OF SUCH INFORMATION IS EXPRESSLY FORBIDDEN WITHOUT OUR PRIOR WRITTEN PERMISSION

FEATHERLITE
1601 DOLGNER PL
SANFORD FLA 32771
TEL. 1-407-323-1120 FAX 1-407-323-1945

TITLE:
ELEVATIONS
-GALLEY-

SCALE:
DRAWING NO.: 46200021
REV ---
DRAWING FILE # NONE
SHEET: 5 OF 6

NOTE — INTERPRET ALL DRAWINGS IN ACCORDANCE WITH ANSI Y14.5-1982
1 REMOVE ALL SHARP EDGES

REVISIONS			
REV.	DESCRIPTION	DATE	APPROVAL
A			
B			
C			
D			

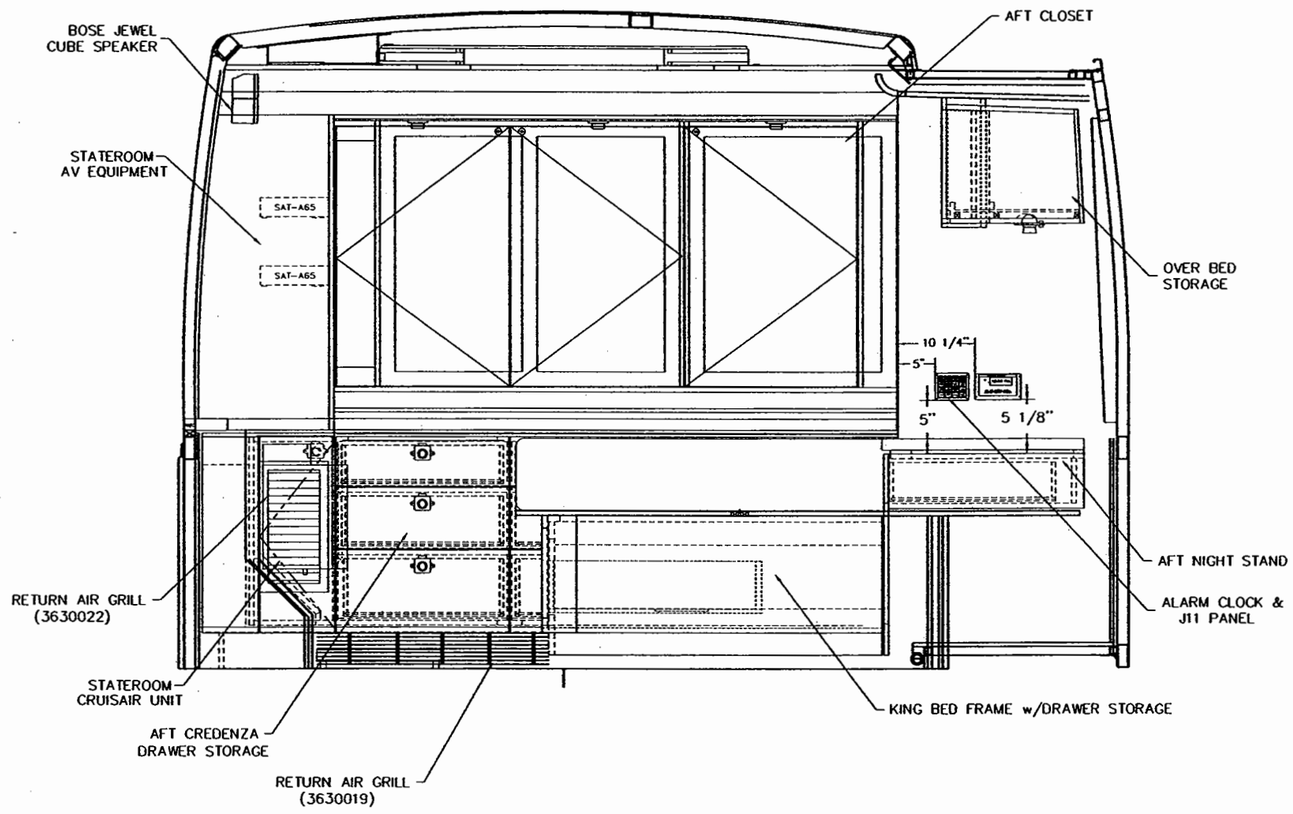

SECTION D D
VIEW OF STATEROOM LOOKING AFT

HARDWARE BILL OF MATERIAL

CUSTOMER NAME: MODEL COACH - SANIBEL I
CUSTOMER APPROVAL & DATE:

THIRD ANGLE PROJECTION
DO NOT SCALE DRAWING
TOLERANCES UNLESS OTHERWISE SPECIFIED:
ANGLES: ± 1/4°
FRACTIONS: ±1/64
DECIMALS: XX ±.010
DECIMALS: XXX ±.005

DWG. BY L.M. Simmons
CHK. BY
ENGR. BY
CHASIS: H3-45-S2-S
DATE : 6/27/03

PROPRIETARY NOTICE:
THIS DOCUMENT AND THE INFORMATION DISCLOSED ARE CONFIDENTIAL AND PROPRIETARY TO FEATHERLITE. DISCLOSURE OF SUCH INFORMATION IS EXPRESSLY FORBIDDEN WITHOUT OUR PRIOR WRITTEN PERMISSION

FEATHERLITE
1601 DOLGNER PL
SANFORD FLA 32771
TEL. 1-407-323-1120 FAX 1-407-323-1945

TITLE:
ELEVATIONS
-STATEROOM-

SCALE:
DRAWING NO.: 46200021
REV ---
DRAWING FILE # NONE
SHEET: 6 OF 6

NOTE — INTERPRET ALL DRAWINGS IN ACCORDANCE WITH ANSI Y14.5-1982
1 REMOVE ALL SHARP EDGES

REVISIONS			
REV.	DESCRIPTION	DATE	APPROVAL
A			
B			
C			
D			

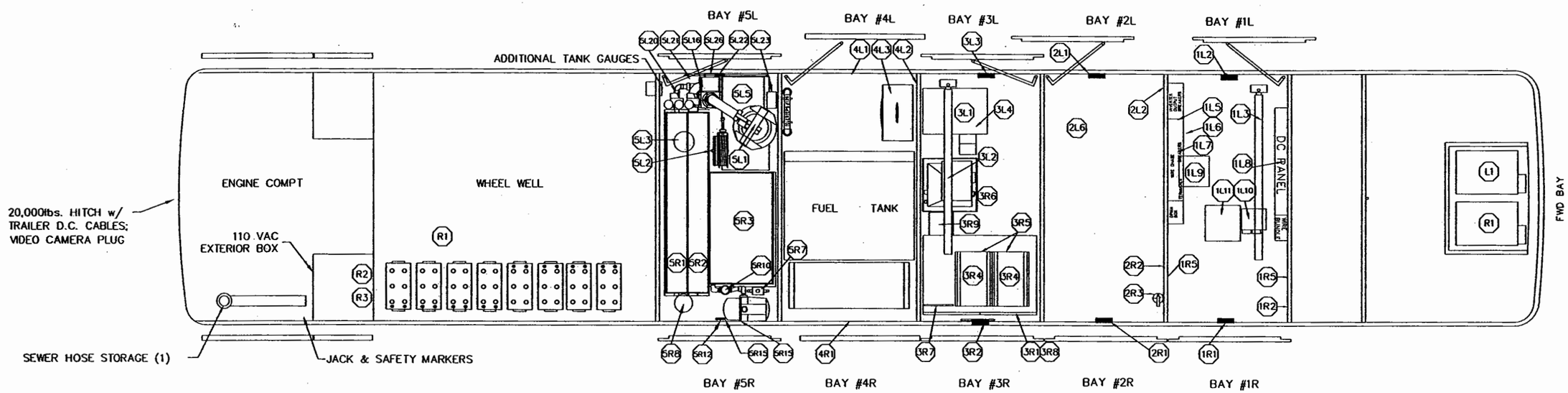

BAY #5L

5L1 GLENDINNING CABLE MASTER w/REMOTE
5L2 HOSE REEL
5L3 ELECTRIC HEATER
5L4 BAY SWITCH PANEL
5L5 AQUA HOT UNIT
5L6 SHORE POWER INPUT BREAKER w/ REVERSE POLARITY TRIP
5L7 SHORE POWER DISCONNECT
5L8 FRESH FILL
5L9 BLACK FLUSH SYSTEM
5L10 GRAY FLUSH SYSTEM
5L12 SHOWER CONTROL VALVE
5L13 WATER SPIGOT
5L14 HOT & COLD SHOWER HEAD
5L15 PAPER TOWEL HOLDER
5L16 T.V. CABLE, LAND LINE PHONE HOOKUP & DUMP
5L17 GFI OUTLET (GUARDED)
5L18 SOAP DISPENSER
5L19 ELECTRIC HEAT THERMOSTAT
5L20 BLACK & GRAY ELECTRIC DUMP VALVE
5L21 MANUAL LOW POINT DRAIN SYS.
5L22 BAY LIGHT
5L23 AQUA-HOT HEATER
5L24 CABLE MASTER CONTROL SWITCH
5L25 AQUA-HOT THERMOSTAT
5L26 TANK LEVEL GAUGES
5L27 QUICK RELEASE AIR CHUCK

BAY #5R

5R1 GRAY WATER TANK
5R2 BLACK WATER TANK
5R3 FRESH WATER TANK
5R4 WATER PUMP
5R5 ELECTRIC HEATER
5R6 FRESH WATER HOSE BIBB
5R7 WATER MANIFOLD
5R9 MAIN (DC) BREAKER PANEL
5R10 PARTICULATE WATER FILTER
5R11 WATER SPIGOT
5R12 BAY LIGHT
5R13 110v GFI OUTLET
5R14 ELEC. HEAT THERMOSTAT
5R15 PLUMBING BAY PANEL
5R16 DUMP VALVE (FITTING ONLY)
5R18 DUMP VALVE (FITTING ONLY)

BAY #4L

4L1 BAY LIGHT
4L2 GFI OUTLET
4L3 TOOL BOX
4R4 TELESCOPING LADDER

BAY #4R

4R1 BAY LIGHT
4R2 100LB NORCOLD
4R3 27" WEGA TV
4R4 AWNING SWITCH PANEL
4R5 INFRARED EYE
4R6 GFI OUTLET
4R7 SMALL STORAGE AREA
4R8 GIG HTZ PHONE
4R9 CURRENT SENSOR BOX
4R10 SQUIRREL CAGE BLOWER
4R11 SUPPLY-AIR GRILL (4x4)
4R12 PHONE JACK

BAY #3R

3R1 17.5kw POWERTECH GENERATOR
3R2 BAY LIGHT
3R3 TRANSFER SWITCH
3R4 4000 watt INVERTER w/ 24V CHARGERS
3R5 INVERTER FAN
3R6 GENERATOR RADIATOR AND BLOWER
3R7 GENERATOR AIR BAG CONTROL & AIR CHUCK
3R8 GENERATOR BOX w/ POLISHED DOORS & FACE FRAME
3R9 GENERATOR AIR BLOWER
3R10 INVERTER OUTPUT BREAKER
3R11 GENERATOR START POWER

BAY #3L

3L1 BAY LIGHT
3L2 CRUISAIR CONDENSER (ACH-14HB)
3L3 CRUISAIR CONDENSER (ACH-14B)
3L4 110V GFI ELECTRICAL OUTLET
3L5 GENERATOR AIR BLOWER
3L6 GENERATOR RADIATOR

BAY #2R

2R1 BAY LIGHT
2R2 GFI OUTLET
2R3 FIRE EXTINGUISHER

BAY #2L

2L1 BAY LIGHT
2L2 GFI OUTLET
2L3 ELECTRIC HEATER
2L4 AWNING CONTROL BOX
2L5 SLIDE OUT RELAY PANEL

WHEEL WELL

R1-BATTERY RACK
R2-BATTERY EQUALIZER
R2-BATTERY MONITOR

BAY #1L

1L1 GFI OUTLET
1L2 BAY LIGHT
1L3 ELECTRIC RAM
1L5 SLIDEOUT CONTROL BOX
1L6 TRANSFER SWITCH
1L7 AC RELAY PANEL
1L8 DC RELAY PANEL
1L9 FIBER OPTIC BOX (CEILING MOUNTED)
1L10 LIGHT DIMMER BOX
1L11 BAY INTERFACE BOX

BAY #1R

1R1 BAY LIGHT
1R2 GFI OUTLET
1R3 SONY AM/FM/CD RADIO
1R4 SPEAKERS
1R5 CHAIR STORAGE
1R6 INFRARED EYE

FWD BAY

L1-CRUISAIR CONDENSER (ACH-14B)
R1-CRUISAIR CONDENSER (ACH-14B)

GENERAL INFO.

-BAY-DOORS KEYED ALIKE
-ZOLATONE WALLS & FLOOR IN STORAGE BAYS
-POLISHED S.S. GENERATOR BOX DOORS
-AQUA-HOT HEATING SYS. EXHAUSTED TO REAR OF COACH
-GENERATOR EXHAUSTED TO REAR
-PLUMBING & ELECTRICAL PANELS COVERED W/ LAMINATE

CUSTOMER NAME: MODEL COACH - SANIBEL 1
CUSTOMER APPROVAL & DATE:

THIRD ANGLE PROJECTION
DO NOT SCALE DRAWING
TOLERANCES UNLESS OTHERWISE SPECIFIED:
ANGLES: ± 1/4°
FRACTIONS: ±1/64
DECIMALS: XX ±.010
DECIMALS: XXX ±.005

DWG. BY L.M. Simmons
CHK. BY
ENGR. BY
CHASSIS: H3-45-S2-S
DATE: 6/27/03

PROPRIETARY NOTICE:
THIS DOCUMENT AND THE INFORMATION DISCLOSED ARE CONFIDENTIAL AND PROPRIETARY TO FEATHERLITE. DISCLOSURE OF SUCH INFORMATION IS EXPRESSLY FORBIDDEN WITHOUT OUR PRIOR WRITTEN PERMISSION

FEATHERLITE
1601 DOLGNER PL
SANFORD FLA 32771
TEL 1-407-323-1120 FAX 1-407-323-1945

TITLE: BAY LAYOUT

SCALE:
DRAWING NO.: 46200051
DRAWING FILE #: NONE
SHEET: 1 OF 3
REV: —

NOTE — INTERPRET ALL DRAWINGS IN ACCORDANCE WITH ANSI Y14.5-1982
1 REMOVE ALL SHARP EDGES

REVISIONS			
REV.	DESCRIPTION	DATE	APPROVAL
A			
B			
C			
D			

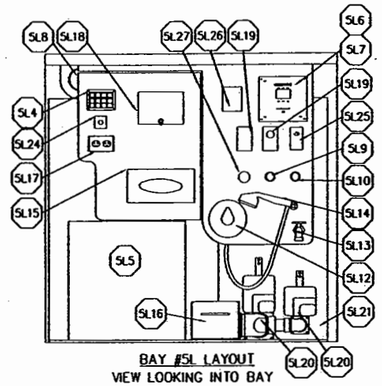

BAY #5L LAYOUT
VIEW LOOKING INTO BAY
FWD.

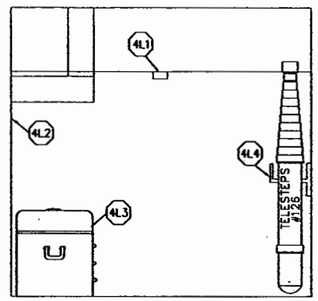

BAY #4L LAYOUT
VIEW LOOKING INTO BAY
FWD.

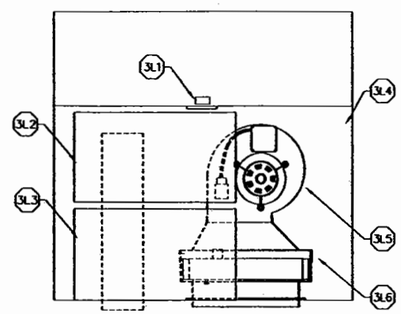

BAY #3L LAYOUT
VIEW LOOKING INTO BAY
FWD.

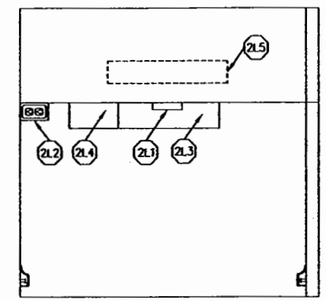

BAY #2L LAYOUT
VIEW LOOKING INTO BAY
FWD.

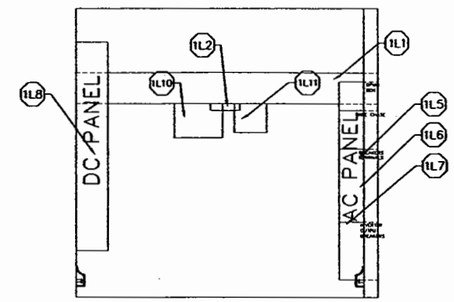

BAY #1L LAYOUT
VIEW LOOKING INTO BAY
FWD.

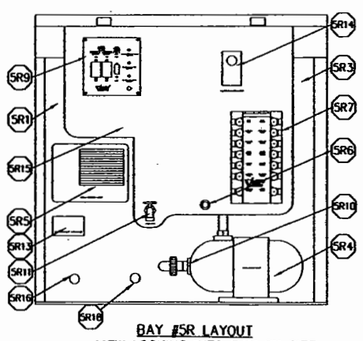

BAY #5R LAYOUT
VIEW LOOKING INTO BAY 2X SIZE
FWD.

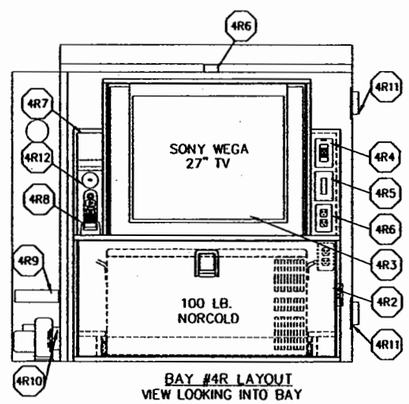

BAY #4R LAYOUT
VIEW LOOKING INTO BAY
FWD.

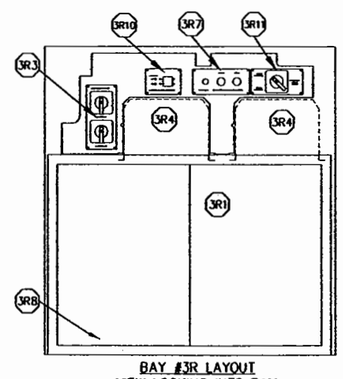

BAY #3R LAYOUT
VIEW LOOKING INTO BAY
FWD.

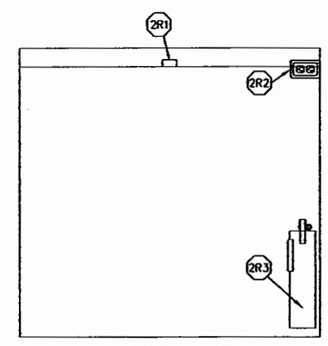

BAY #2R LAYOUT
VIEW LOOKING INTO BAY
FWD.

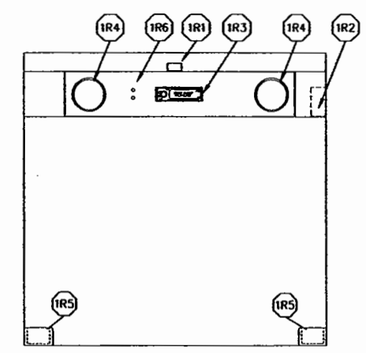

BAY #1R LAYOUT
VIEW LOOKING INTO BAY
FWD.

THIRD ANGLE PROJECTION

DO NOT SCALE DRAWING

TOLERANCES UNLESS OTHERWISE SPECIFIED:
ANGLES: ± 1/4°
FRACTIONS: ±1/64
DECIMALS: XX ±.010
DECIMALS: XXX ±.005

CUSTOMER NAME: MODEL COACH – SANIBEL 1

CUSTOMER APPROVAL & DATE:

DWG. BY L.M. Simmons

CHK. BY

ENGR. BY

CHASSIS: H3-45-S2-S

DATE : 6/27/03

PROPRIETARY NOTICE:
THIS DOCUMENT AND THE INFORMATION DISCLOSED ARE CONFIDENTIAL AND PROPRIETARY TO FEATHERLITE. DISCLOSURE OF SUCH INFORMATION IS EXPRESSLY FORBIDDEN WITHOUT OUR PRIOR WRITTEN PERMISSION

FEATHERLITE
1601 DOLGNER PL
SANFORD FLA 32771
TEL. 1-407-323-1120 FAX 1-407-323-1945

TITLE: BAY LAYOUT

SCALE:

DRAWING NO.: 46200051

REV –

DRAWING FILE # NONE

SHEET: 2 OF 3

NOTE — INTERPRET ALL DRAWINGS IN ACCORDANCE WITH ANSI Y14.5-1982
1 REMOVE ALL SHARP EDGES

REVISIONS			
REV.	DESCRIPTION	DATE	APPROVAL
A			
B			
C			
D			

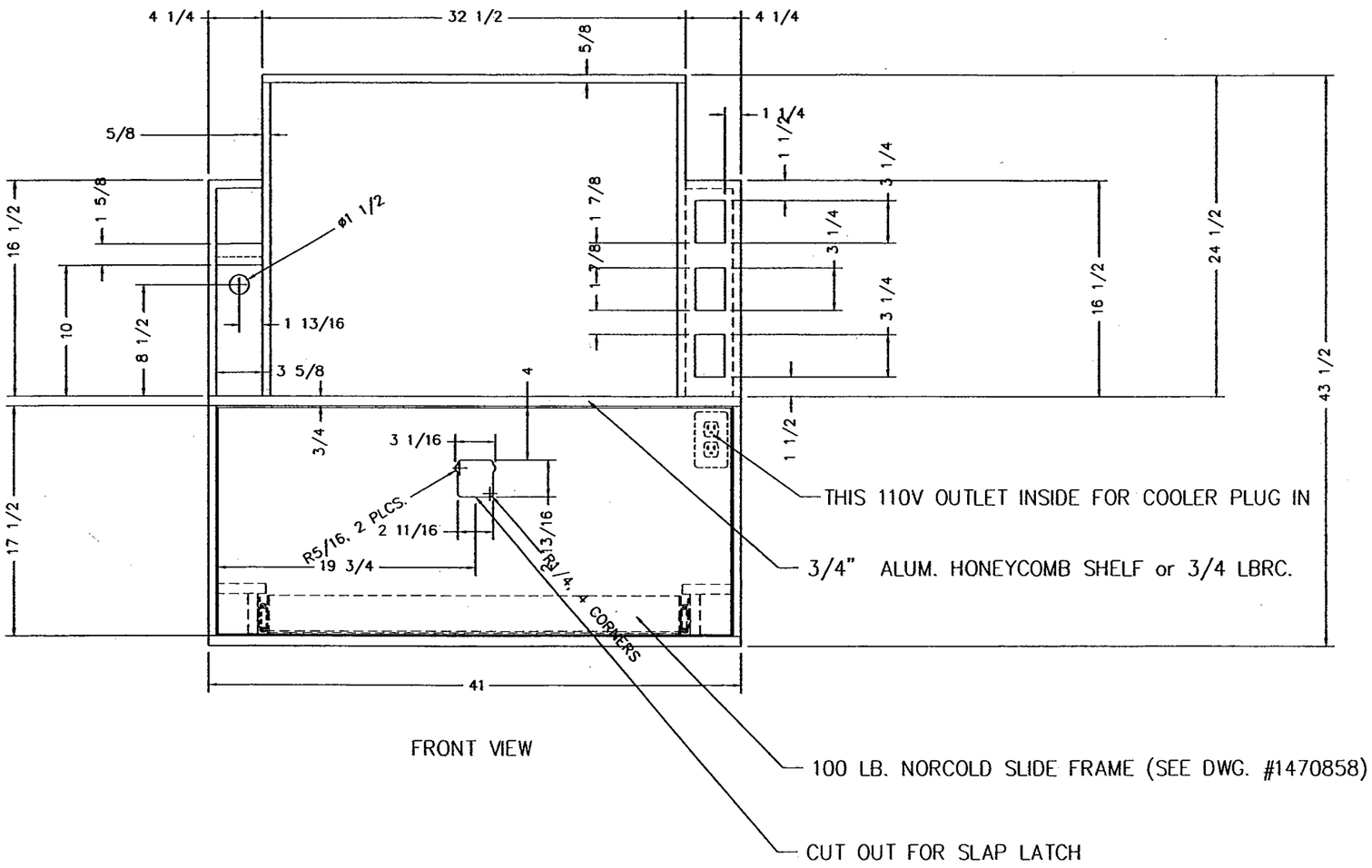

FRONT VIEW

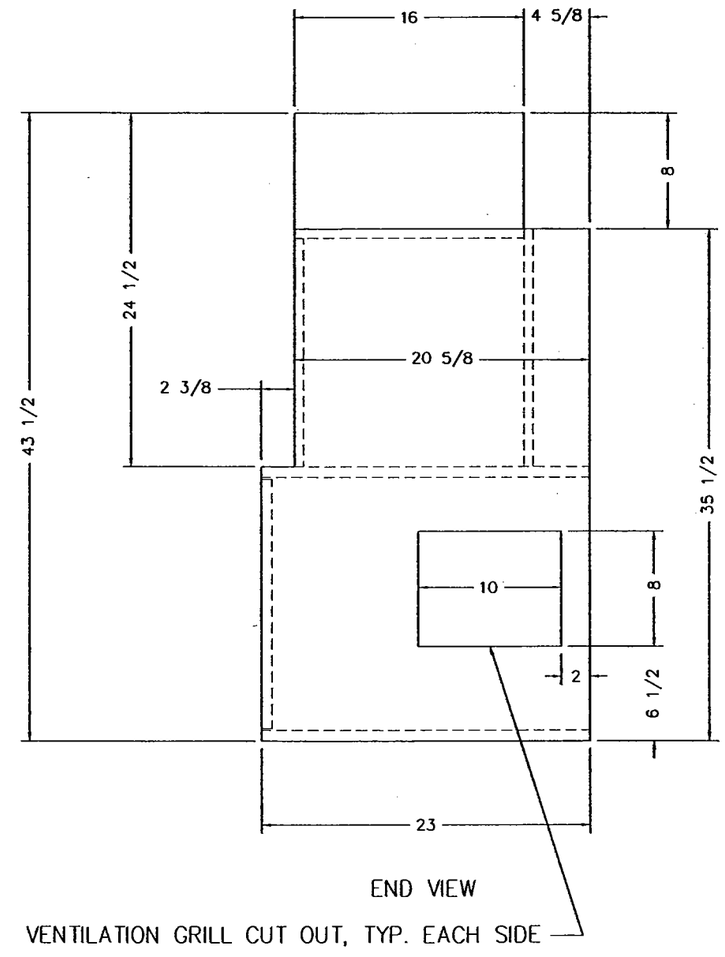

END VIEW

BAY #4R LAYOUT
VIEW LOOKING INTO BAY
FWD. →

NOTE TO BUILDER:
BAY DOOR HORIZONTAL BARS WILL HAVE
TO BE RELOCATED TO ACCOMMODATE CAB

CUSTOMER NAME: MODEL COACH - SANIBEL 1
CUSTOMER APPROVAL & DATE:

THIRD ANGLE PROJECTION
DO NOT SCALE DRAWING
TOLERANCES UNLESS OTHERWISE SPECIFIED:
ANGLES: ± 1/4°
FRACTIONS: ±1/64
DECIMALS: XX ±.010
DECIMALS: XXX ±.005

DWG. BY L.M. SIMMONS
CHK. BY BH
ENGR. BY
CHASIS: H3-45-S2-S
DATE: 6/27/03

PROPRIETARY NOTICE:
THIS DOCUMENT AND THE INFORMATION DISCLOSED ARE CONFIDENTIAL AND PROPRIETARY TO FEATHERLITE. DISCLOSURE OF SUCH INFORMATION IS EXPRESSLY FORBIDDEN WITHOUT OUR PRIOR WRITTEN PERMISSION

FEATHERLITE
1601 DOLGNER PL
SANFORD FLA 32771
TEL 1-407-323-1120 FAX 1-407-323-1945

TITLE: BAY LAYOUT

SCALE:
DRAWING NO.: 46200051
REV —
DRAWING FILE # NONE
SHEET 3 OF 3

NOTE — INTERPRET ALL DRAWINGS IN ACCORDANCE WITH ANSI Y14.5-1982
1 REMOVE ALL SHARP EDGES

REVISIONS			
REV.	DESCRIPTION	DATE	APPROVAL
A			
B			
C			
D			

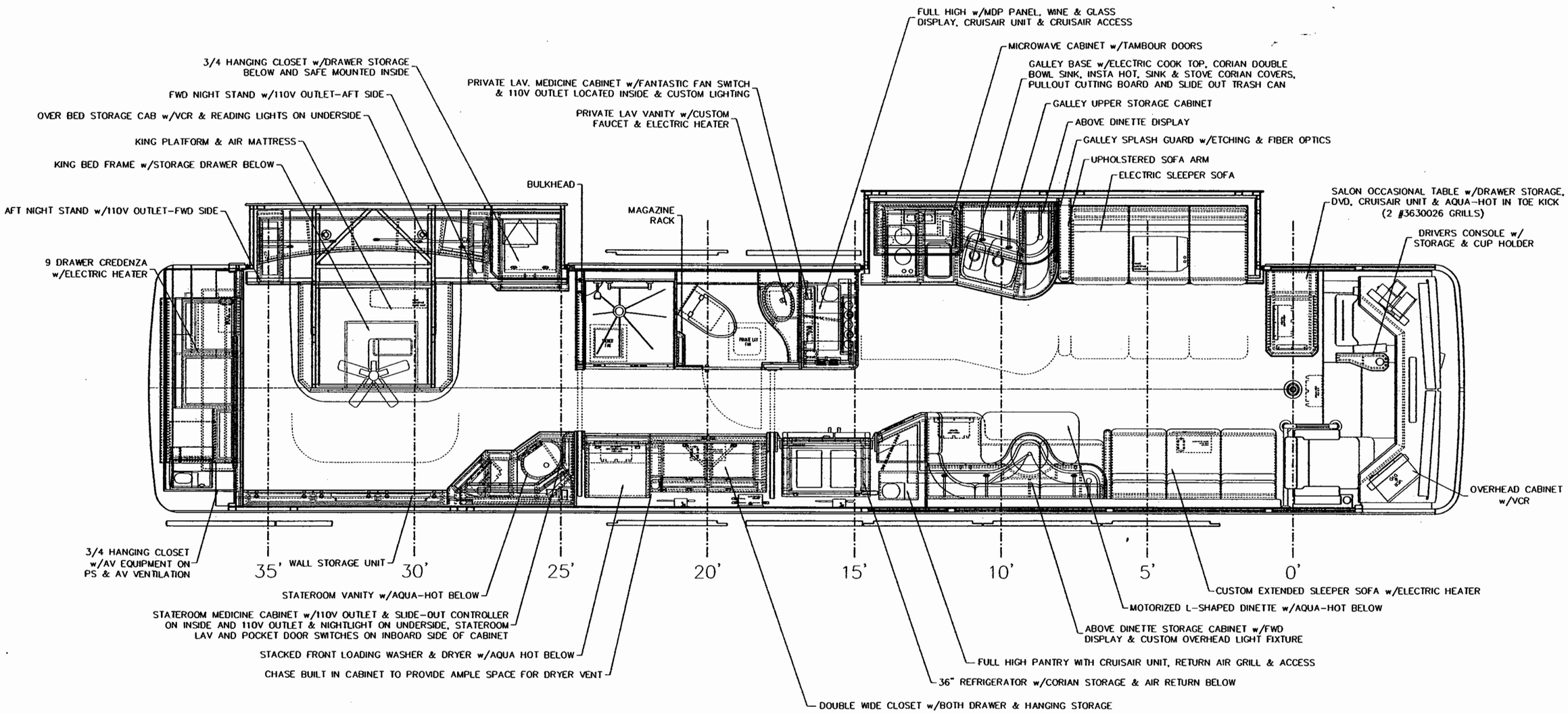

HARDWARE BILL OF MATERIAL

CUSTOMER NAME: MODEL COACH - SANIBEL I

CUSTOMER APPROVAL & DATE:

THIRD ANGLE PROJECTION

DO NOT SCALE DRAWING

TOLERANCES UNLESS OTHERWISE SPECIFIED:
ANGLES: ± 1/4°
FRACTIONS: ±1/64
DECIMALS: XX ±.010
DECIMALS: XXX ±.005

DWG. BY L.M. SIMMONS

CHK. BY RH

ENGR. BY

CHASIS: H3-45-S2-S

DATE : 6/27/03

PROPRIETARY NOTICE:

THIS DOCUMENT AND THE INFORMATION DISCLOSED ARE CONFIDENTIAL AND PROPRIETARY TO FEATHERLITE. DISCLOSURE OF SUCH INFORMATION IS EXPRESSLY FORBIDDEN WITHOUT OUR PRIOR WRITTEN PERMISSION

FEATHERLITE
1601 DOLGNER PL
SANFORD FLA 32771
TEL. 1-407-323-1120 FAX 1-407-323-1945

TITLE: CABINET LAYOUT

SCALE:

DRAWING NO.: 46200071

REV ---

DRAWING FILE # NONE

SHEET: 1 OF 1

FORM 1096-06206

NOTE — INTERPRET ALL DRAWINGS IN ACCORDANCE WITH ANSI Y14.5-1982
1 REMOVE ALL SHARP EDGES

REVISIONS			
REV.	DESCRIPTION	DATE	APPROVAL
A			
B			
C			
D			

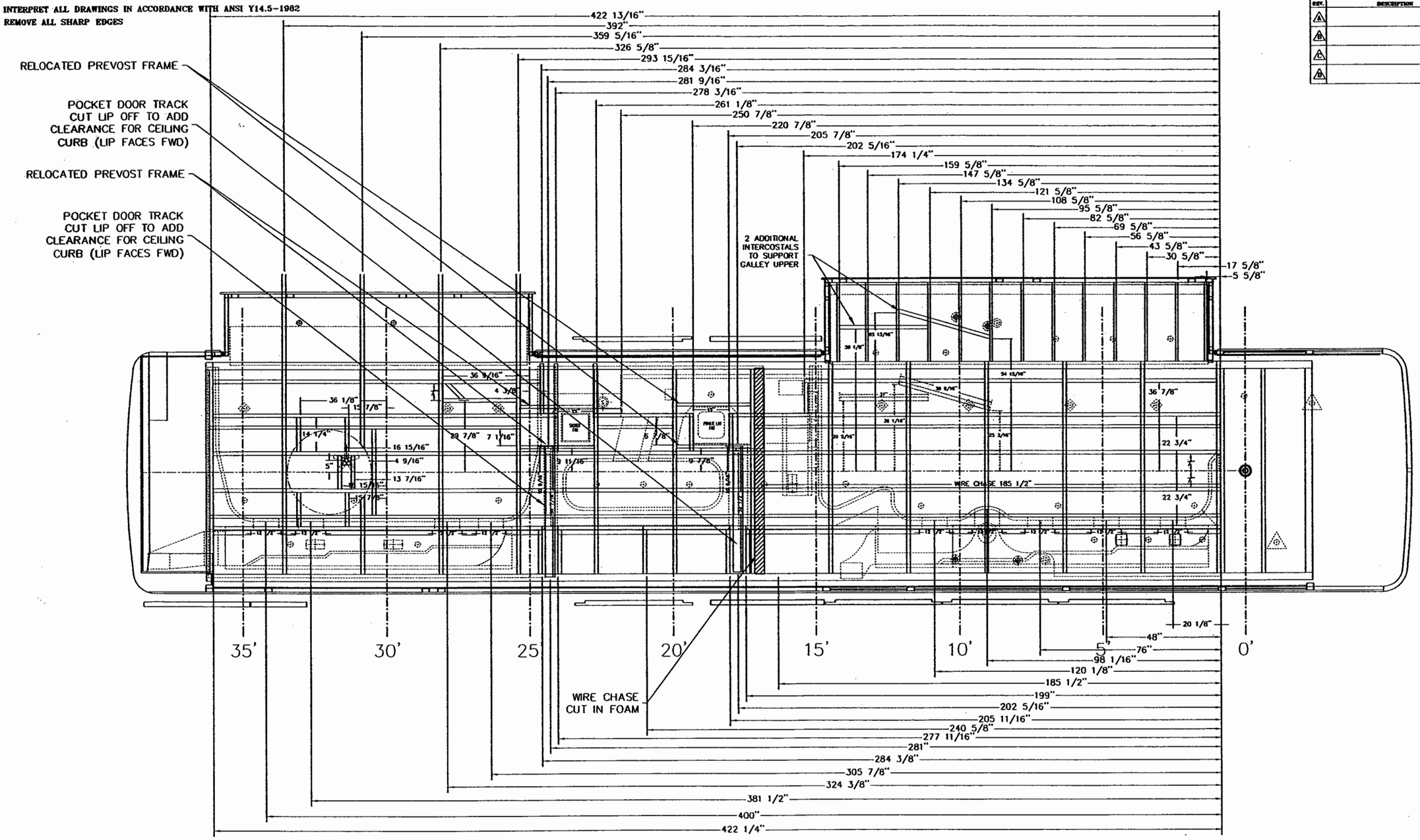

HARDWARE BILL OF MATERIAL

THIRD ANGLE PROJECTION

DO NOT SCALE DRAWING

TOLERANCES UNLESS OTHERWISE SPECIFIED:
ANGLES: ± 1/4°
FRACTIONS: ±1/64
DECIMALS: XX ±.010
DECIMALS: XXX ±.005

CUSTOMER NAME: MODEL COACH – SANIBEL I

CUSTOMER APPROVAL & DATE:

DWG. BY L.M. Simmons

CHK. BY

ENGR. BY

CHASE: H3-45-S2-S

DATE : 6/27/03

PROPRIETARY NOTICE:
THIS DOCUMENT AND THE INFORMATION DISCLOSED ARE CONFIDENTIAL AND PROPRIETARY TO FEATHERLITE. DISCLOSURE OF SUCH INFORMATION IS EXPRESSLY FORBIDDEN WITHOUT OUR PRIOR WRITTEN PERMISSION

FEATHERLITE
1601 DOLGNER PL
SANFORD FLA 32771
TEL. 1-407-323-1120 FAX 1-407-323-1945

TITLE: CEILING FRAME LAYOUT

SCALE:

DRAWING NO.: 46200301

REV ---

DRAWING FILE # NONE

SHEET: 1 OF 3

NOTE — INTERPRET ALL DRAWINGS IN ACCORDANCE WITH ANSI Y14.5-1982
1 REMOVE ALL SHARP EDGES

REVISIONS			
REV.	DESCRIPTION	DATE	APPROVAL
A	-		
B			
C			
D			

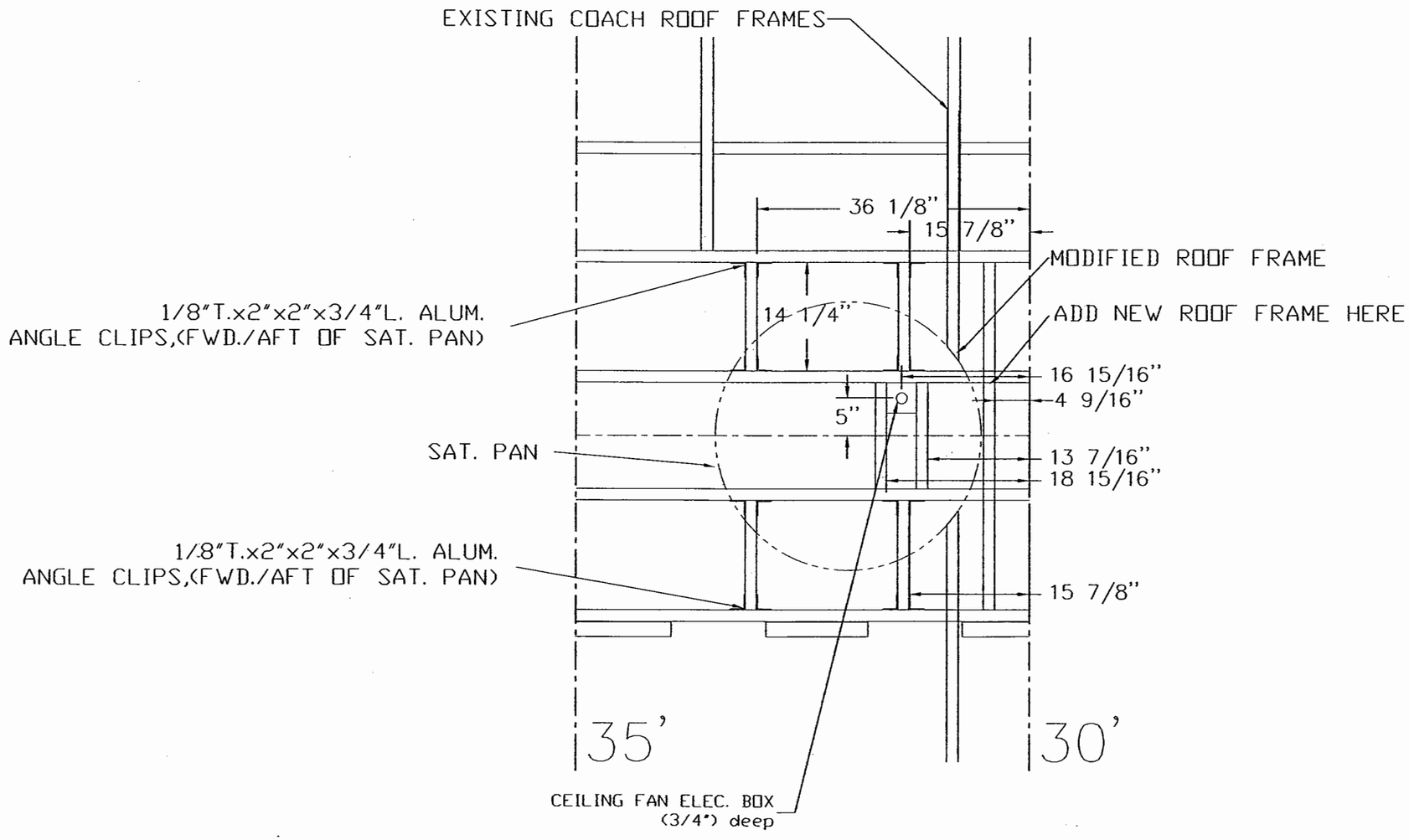

HARDWARE BILL OF MATERIAL

CUSTOMER NAME: MODEL COACH – SANIBEL I
CUSTOMER APPROVAL & DATE:

THIRD ANGLE PROJECTION
DO NOT SCALE DRAWING
TOLERANCES UNLESS OTHERWISE SPECIFIED:
ANGLES: ± 1/4°
FRACTIONS: ±1/64
DECIMALS: XX ±.010
DECIMALS: XXX ±.005

DWG. BY L.M. Simmons
CHK. BY
ENGR. BY
CHASIS: H3-45-S2-S
DATE : 6/27/03

PROPRIETARY NOTICE:
THIS DOCUMENT AND THE INFORMATION DISCLOSED ARE CONFIDENTIAL AND PROPRIETARY TO FEATHERLITE. DISCLOSURE OF SUCH INFORMATION IS EXPRESSLY FORBIDDEN WITHOUT OUR PRIOR WRITTEN PERMISSION

FEATHERLITE
1601 DOLGNER PL
SANFORD FLA 32771
TEL. 1-407-323-1120 FAX 1-407-323-1945

TITLE:
CEILING FRAME LAYOUT
REAR SATELLITE INSTALATION

SCALE: NTS
DRAWING NO.: 46200301
REV ---
DRAWING FILE # NONE
SHEET: 2 OF 3

NOTE — INTERPRET ALL DRAWINGS IN ACCORDANCE WITH ANSI Y14.5-1982
1 REMOVE ALL SHARP EDGES

REVISIONS			
REV.	DESCRIPTION	DATE	APPROVAL
A			
B			
C			
D			

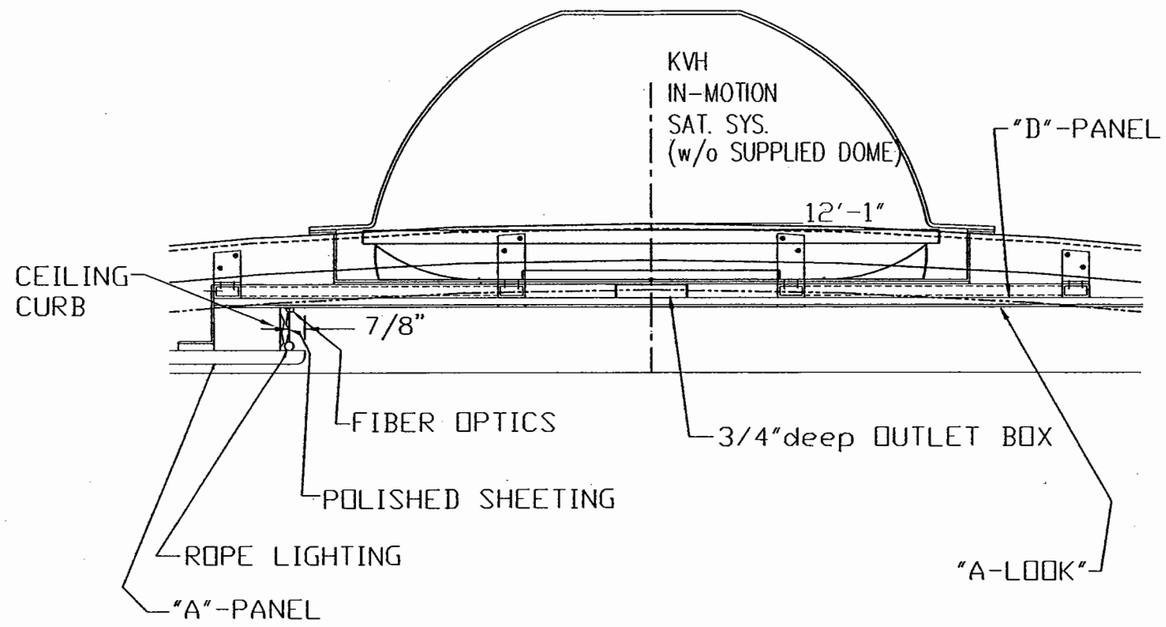

BEDROOM CEILING TREATMENT

(SLIDEOUT CEILING PANEL w/KVH SAT. DISH)
(N.T.S.),(VIEW LOOKING AFT OVER BEDROOM)

HARDWARE BILL OF MATERIAL

CUSTOMER NAME: MODEL COACH - SANIBEL I
CUSTOMER APPROVAL & DATE:

THIRD ANGLE PROJECTION
DO NOT SCALE DRAWING
TOLERANCES UNLESS OTHERWISE SPECIFIED:
ANGLES: ± 1/4°
FRACTIONS: ±1/64
DECIMALS: XX ±.010
DECIMALS: XXX ±.005

DWG. BY L.M. Simmons
CHK. BY BH
ENGR. BY
CHASIS: H3-45-S2-S
DATE : 6/27/03

PROPRIETARY NOTICE:
THIS DOCUMENT AND THE INFORMATION DISCLOSED ARE CONFIDENTIAL AND PROPRIETARY TO FEATHERLITE. DISCLOSURE OF SUCH INFORMATION IS EXPRESSLY FORBIDDEN WITHOUT OUR PRIOR WRITTEN PERMISSION

FEATHERLITE
1601 DOLGNER PL
SANFORD FLA 32771
TEL. 1-407-323-1120 FAX 1-407-323-1945

TITLE:
CEILING FRAME LAYOUT
REAR SATELLITE INSTALATION

SCALE: NTS
DRAWING NO.: 46200301
REV ---
DRAWING FILE # NONE
SHEET: 3 OF 3

NOTE — INTERPRET ALL DRAWINGS IN ACCORDANCE WITH ANSI Y14.5-1982
1 REMOVE ALL SHARP EDGES

REVISIONS			
REV.	DESCRIPTION	DATE	APPROVAL
A			
B			
C			
D			

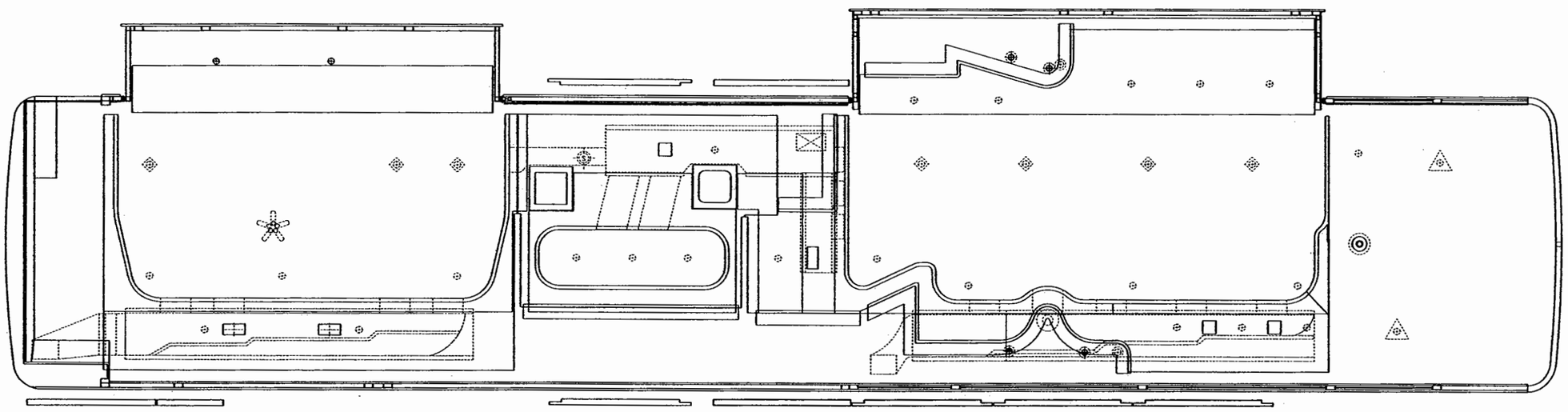

HARDWARE BILL OF MATERIAL

CUSTOMER NAME: MODEL COACH – SANIBEL I

CUSTOMER APPROVAL & DATE:

THIRD ANGLE PROJECTION

DO NOT SCALE DRAWING

TOLERANCES UNLESS OTHERWISE SPECIFIED:
ANGLES: ± 1/4°
FRACTIONS: ±1/64
DECIMALS: XX ±.010
DECIMALS: XXX ±.005

DWG. BY L.M. Simmons

CHK. BY

ENGR. BY

CHASIS: H3-45-S2-S

DATE : 6/27/03

PROPRIETARY NOTICE:

THIS DOCUMENT AND THE INFORMATION DISCLOSED ARE CONFIDENTIAL AND PROPRIETARY TO FEATHERLITE. DISCLOSURE OF SUCH INFORMATION IS EXPRESSLY FORBIDDEN WITHOUT OUR PRIOR WRITTEN PERMISSION

FEATHERLITE
1601 DOLGNER PL
SANFORD FLA 32771
TEL. 1-407-323-1120 FAX 1-407-323-1945

TITLE: CEILING PANEL LAYOUT

SCALE:

DRAWING NO.: 46200311

REV ---

DRAWING FILE # NONE

SHEET: 1 OF 1

NOTE — INTERPRET ALL DRAWINGS IN ACCORDANCE WITH ANSI Y14.5-1982
1 REMOVE ALL SHARP EDGES

REVISIONS			
REV.	DESCRIPTION	DATE	APPROVAL
A			
B			
C			
D			

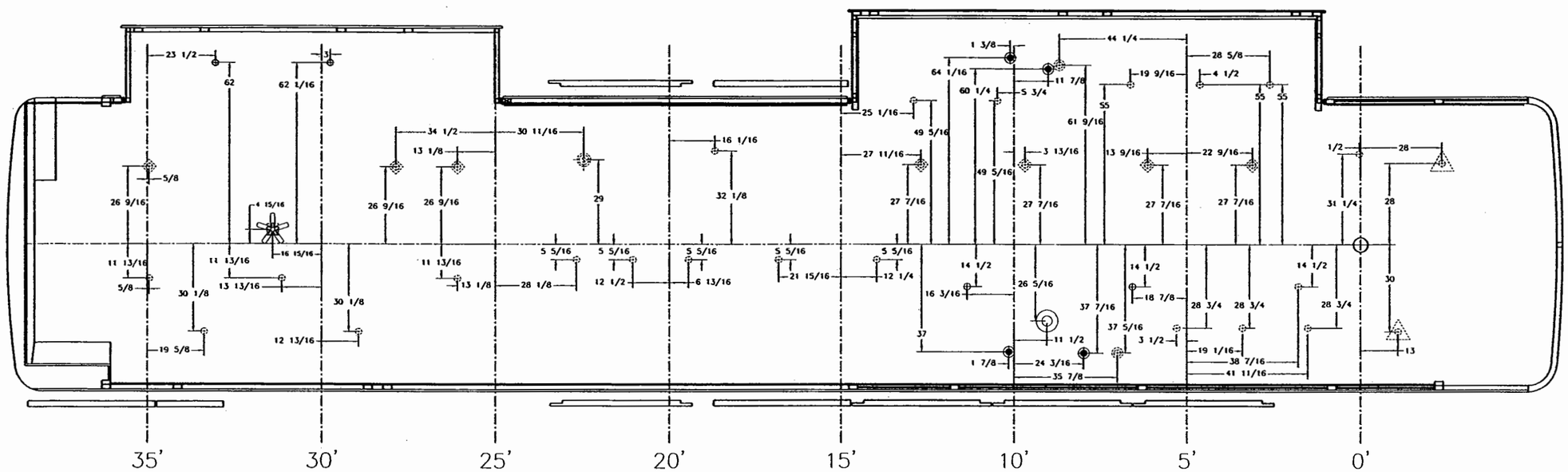

LEGEND

- ◈ = SWITCHED SEPARATELY ON RELAY TO TURN OFF WHEN ROOM RETRACTS
- ⊕ = HALOGEN CEILING LIGHTS
- ◉ = UNDER AN OVERHEAD CABINET (SWITCHED SEPARATELY)
- ⊕ = SWITCHED AT DRIVER AND PASSENGER STATION
- ⊕ = DISPLAY LIGHT
- ⊕ = SHOWER LIGHT
- ✳ = ELECTRIC CEILING FAN
- ⊙ = CHANDELIER

HARDWARE BILL OF MATERIAL

CUSTOMER NAME: MODEL COACH - SANIBEL I
CUSTOMER APPROVAL & DATE:

THIRD ANGLE PROJECTION
DO NOT SCALE DRAWING
TOLERANCES UNLESS OTHERWISE SPECIFIED:
ANGLES: ± 1/4°
FRACTIONS: ±1/64
DECIMALS: XX ±.010
DECIMALS: XXX ±.005

DWG. BY L.M. Simmons
CHK. BY
ENGR. BY
CHASIS: H3-45-S2-S
DATE : 6/27/03

PROPRIETARY NOTICE:
THIS DOCUMENT AND THE INFORMATION DISCLOSED ARE CONFIDENTIAL AND PROPRIETARY TO FEATHERLITE. DISCLOSURE OF SUCH INFORMATION IS EXPRESSLY FORBIDDEN WITHOUT OUR PRIOR WRITTEN PERMISSION

FEATHERLITE
1601 DOLGNER PL
SANFORD FLA 32771
TEL. 1-407-323-1120 FAX 1-407-323-1945

TITLE: CEILING LIGHTING LAYOUT

SCALE:
DRAWING NO.: 46200321
REV ---
DRAWING FILE # NONE
SHEET: 1 OF 1

NOTE — INTERPRET ALL DRAWINGS IN ACCORDANCE WITH ANSI Y14.5-1982
1 REMOVE ALL SHARP EDGES

REVISIONS			
REV.	DESCRIPTION	DATE	APPROVAL
A			
B			
C			
D			

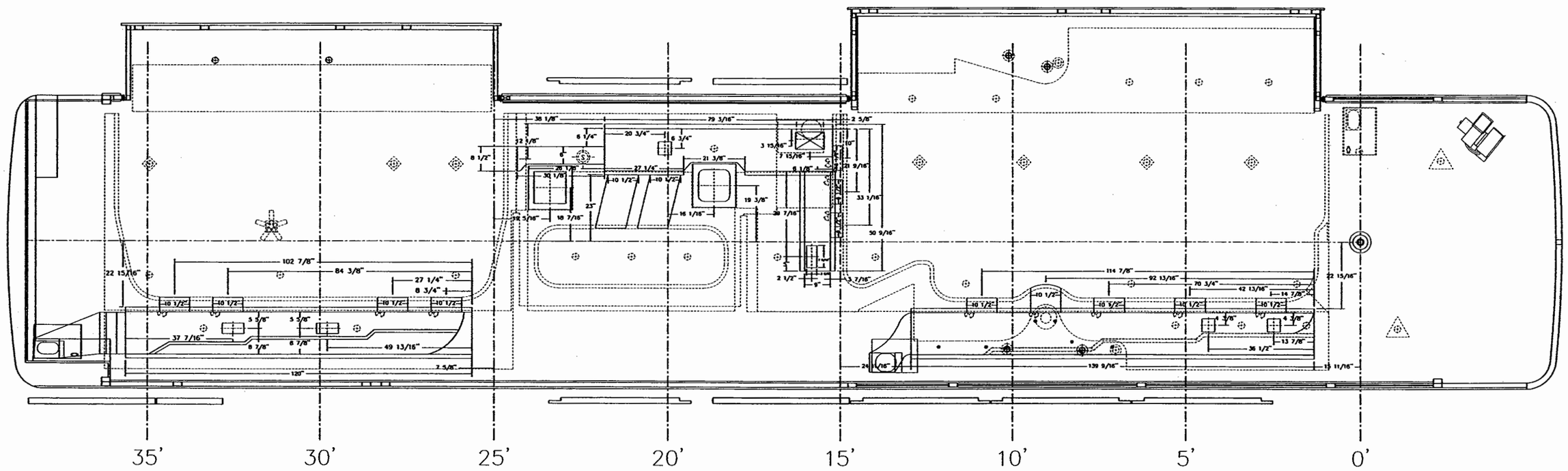

HARDWARE BILL OF MATERIAL

CUSTOMER NAME: MODEL COACH - SANIBEL I

CUSTOMER APPROVAL & DATE:

THIRD ANGLE PROJECTION

DO NOT SCALE DRAWING

TOLERANCES UNLESS OTHERWISE SPECIFIED:
ANGLES: ± 1/4°
FRACTIONS: ±1/64
DECIMALS: XX ±.010
DECIMALS: XXX ±.005

DWG. BY L.M. Simmons
CHK. BY
ENGR. BY
CHASIS: H3-45-S2-S
DATE : 6/27/03

PROPRIETARY NOTICE:
THIS DOCUMENT AND THE INFORMATION DISCLOSED ARE CONFIDENTIAL AND PROPRIETARY TO FEATHERLITE. DISCLOSURE OF SUCH INFORMATION IS EXPRESSLY FORBIDDEN WITHOUT OUR PRIOR WRITTEN PERMISSION

FEATHERLITE
1601 DOLGNER PL
SANFORD FLA 32771
TEL. 1-407-323-1120 FAX 1-407-323-1945

TITLE: A/C LAYOUT

SCALE:

DRAWING NO.: 46200611

DRAWING FILE # NONE

SHEET: 1 OF 5

REV ---

NOTE — INTERPRET ALL DRAWINGS IN ACCORDANCE WITH ANSI Y14.5-1982
1 REMOVE ALL SHARP EDGES

REVISIONS			
REV.	DESCRIPTION	DATE	APPROVAL
A			
B			
C			
D			

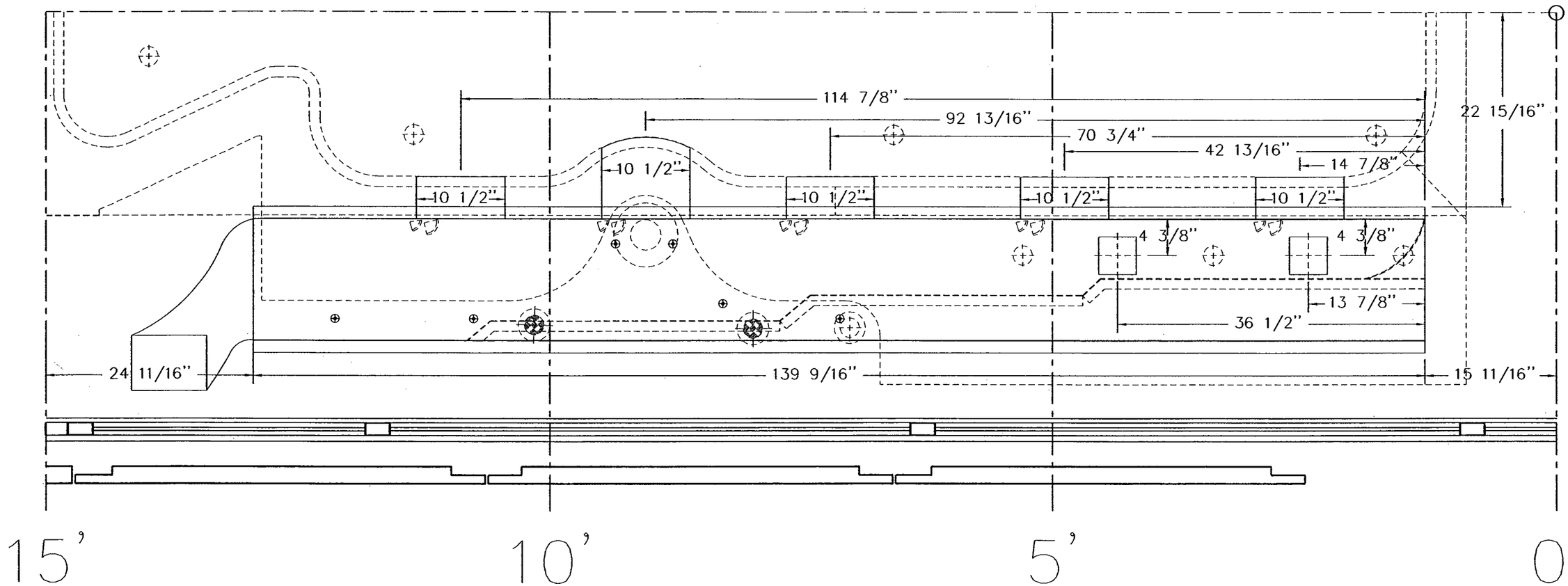

HARDWARE BILL OF MATERIAL

CUSTOMER NAME: MODEL COACH - SANIBEL I

CUSTOMER APPROVAL & DATE:

THIRD ANGLE PROJECTION

DO NOT SCALE DRAWING

TOLERANCES UNLESS OTHERWISE SPECIFIED:
ANGLES: ± 1/4°
FRACTIONS: ±1/64
DECIMALS: XX ±.010
DECIMALS: XXX ±.005

DWG. BY L.M. Simmons
CHK. BY
ENGR. BY
CHASIS: H3-45-S2-S
DATE : 6/27/03

PROPRIETARY NOTICE:
THIS DOCUMENT AND THE INFORMATION DISCLOSED ARE CONFIDENTIAL AND PROPRIETARY TO FEATHERLITE. DISCLOSURE OF SUCH INFORMATION IS EXPRESSLY FORBIDDEN WITHOUT OUR PRIOR WRITTEN PERMISSION

FEATHERLITE
1601 DOLGNER PL
SANFORD FLA 32771
TEL. 1-407-323-1120 FAX 1-407-323-1945

TITLE:
DUCT DETAILS
FWD DUCT

SCALE: NTS

DRAWING NO.: 46200611

REV

DRAWING FILE # NONE

SHEET: 2 OF 5

NOTE — INTERPRET ALL DRAWINGS IN ACCORDANCE WITH ANSI Y14.5-1982
1 REMOVE ALL SHARP EDGES

REVISIONS			
REV.	DESCRIPTION	DATE	APPROVAL
A			
B			
C			
D			

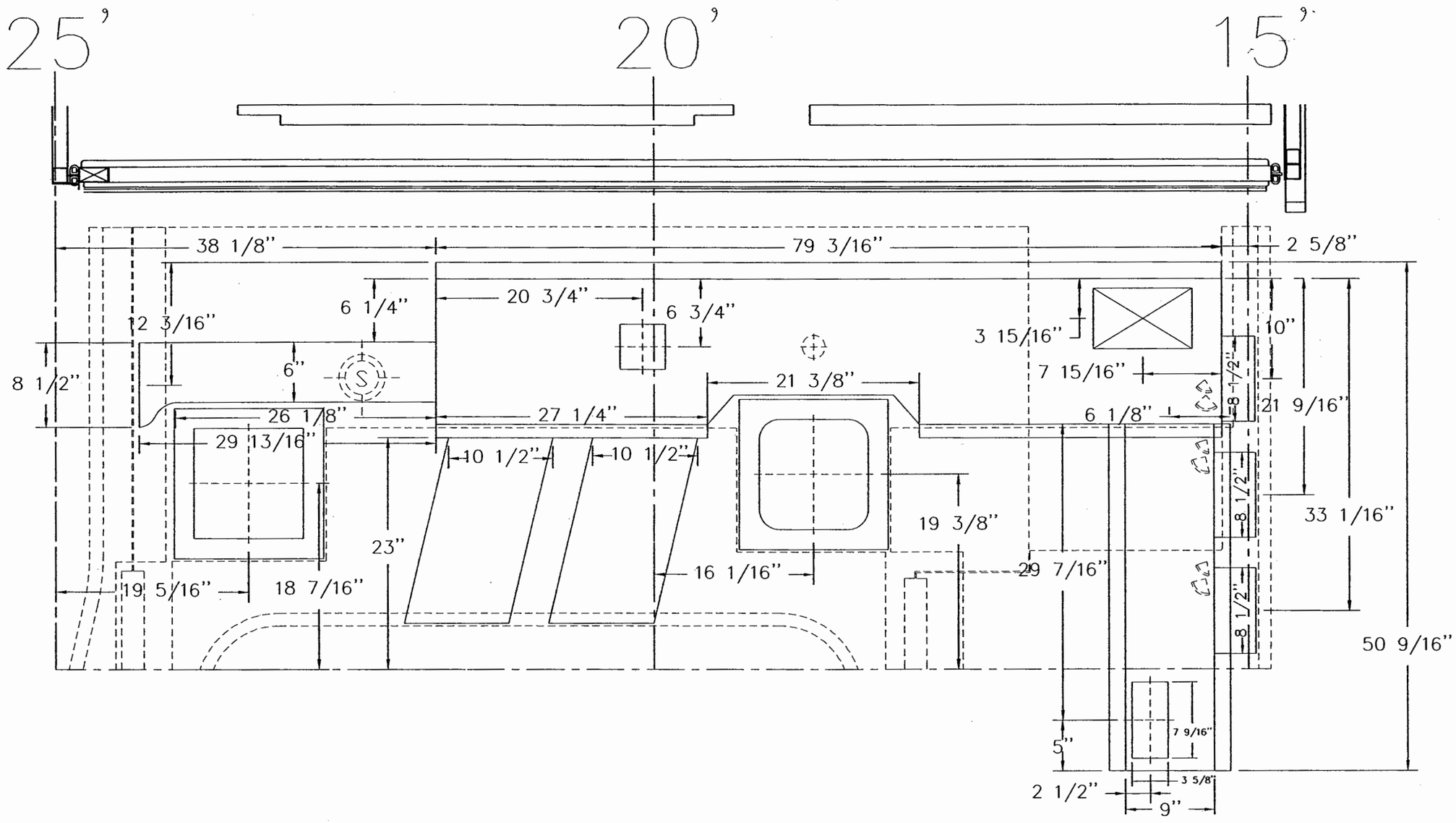

HARDWARE BILL OF MATERIAL

CUSTOMER NAME: MODEL COACH - SANIBEL I

CUSTOMER APPROVAL & DATE:

THIRD ANGLE PROJECTION

DO NOT SCALE DRAWING

TOLERANCES UNLESS OTHERWISE SPECIFIED:
ANGLES: ± 1/4°
FRACTIONS: ±1/64
DECIMALS: XX ±.010
DECIMALS: XXX ±.005

DWG. BY L.M. Simmons

CHK. BY

ENGR. BY

CHASIS: H3-45-S2-S

DATE : 6/27/03

PROPRIETARY NOTICE:

THIS DOCUMENT AND THE INFORMATION DISCLOSED ARE CONFIDENTIAL AND PROPRIETARY TO FEATHERLITE. DISCLOSURE OF SUCH INFORMATION IS EXPRESSLY FORBIDDEN WITHOUT OUR PRIOR WRITTEN PERMISSION

FEATHERLITE
1601 DOLGNER PL
SANFORD FLA 32771
TEL. 1-407-323-1120 FAX 1-407-323-1945

TITLE:
DUCT DETAILS
CENTER DUCT

SCALE: NTS

DRAWING NO.: 46200611

REV ---

DRAWING FILE # NONE

SHEET: 3 OF 5

NOTE — INTERPRET ALL DRAWINGS IN ACCORDANCE WITH ANSI Y14.5-1982
1 REMOVE ALL SHARP EDGES

REVISIONS			
REV.	DESCRIPTION	DATE	APPROVAL
A			
B			
C			
D			

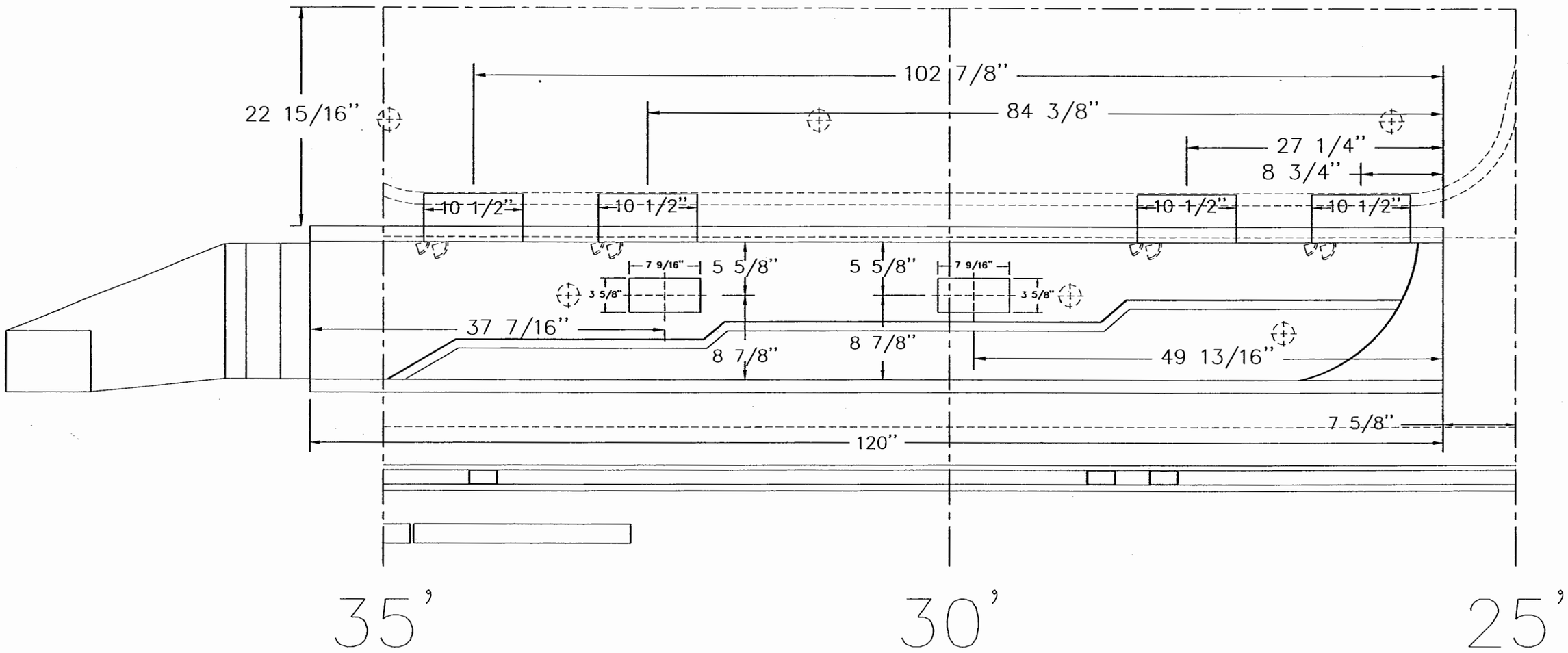

HARDWARE BILL OF MATERIAL

CUSTOMER NAME: MODEL COACH - SANIBEL I

CUSTOMER APPROVAL & DATE:

THIRD ANGLE PROJECTION

DO NOT SCALE DRAWING

TOLERANCES UNLESS OTHERWISE SPECIFIED:
ANGLES: ± 1/2°
FRACTIONS: ±1/64
DECIMALS: XX ±.010
DECIMALS: XXX ±.005

DWG. BY L.M. Simmons

CHK. BY

ENGR. BY

CHASS: H3-45-S2-S

DATE : 6/27/03

PROPRIETARY NOTICE:
THIS DOCUMENT AND THE INFORMATION DISCLOSED ARE CONFIDENTIAL AND PROPRIETARY TO FEATHERLITE. DISCLOSURE OF SUCH INFORMATION IS EXPRESSLY FORBIDDEN WITHOUT OUR PRIOR WRITTEN PERMISSION

FEATHERLITE
1601 DOLGNER PL
SANFORD FLA 32771
TEL. 1-407-323-1120 FAX 1-407-323-1945

TITLE:
DUCT DETAILS
AFT DUCT

SCALE: NTS

DRAWING NO.: 46200611

REV ---

DRAWING FILE # NONE

SHEET: 4 OF 5

NOTE — INTERPRET ALL DRAWINGS IN ACCORDANCE WITH ANSI Y14.5-1982
1 REMOVE ALL SHARP EDGES

REVISIONS			
REV.	DESCRIPTION	DATE	APPROVAL
A			
B			
C			
D			

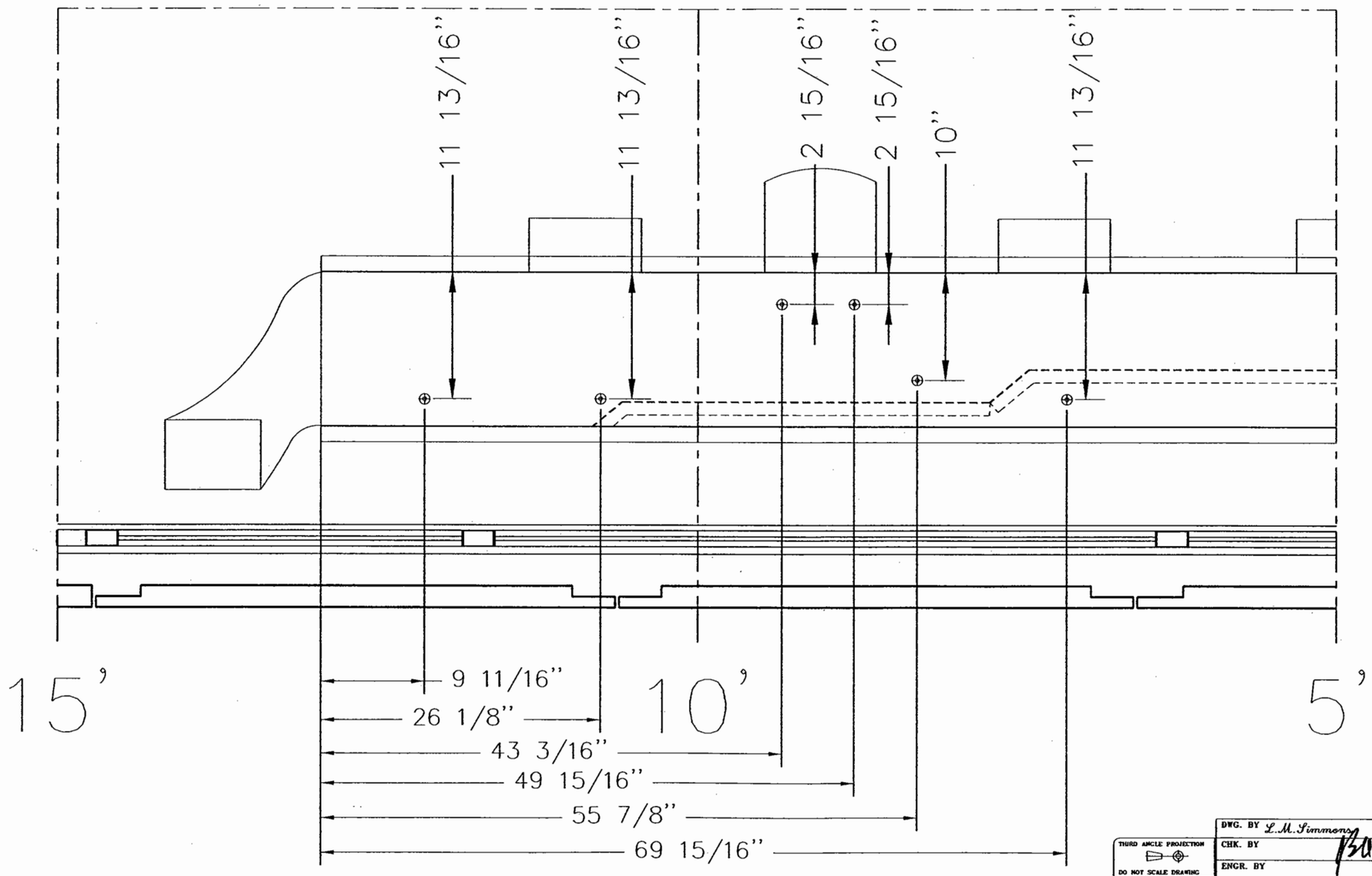

HARDWARE BILL OF MATERIAL

CUSTOMER NAME: MODEL COACH - SANIBEL I

CUSTOMER APPROVAL & DATE:

THIRD ANGLE PROJECTION

DO NOT SCALE DRAWING

TOLERANCES UNLESS OTHERWISE SPECIFIED:
ANGLES: ± 1/4°
FRACTIONS: ±1/64
DECIMALS: XX ±.030
DECIMALS: XXX ±.005

DWG. BY L.M. Simmons
CHK. BY
ENGR. BY

CHASIS: H3-45-S2-S

DATE : 6/27/03

PROPRIETARY NOTICE:
THIS DOCUMENT AND THE INFORMATION DISCLOSED ARE CONFIDENTIAL AND PROPRIETARY TO FEATHERLITE. DISCLOSURE OF SUCH INFORMATION IS EXPRESSLY FORBIDDEN WITHOUT OUR PRIOR WRITTEN PERMISSION

FEATHERLITE
1601 DOLGNER PL
SANFORD FLA 32771
TEL. 1-407-323-1120 FAX 1-407-323-1945

TITLE:
A/C LAYOUT
CABINET ROD PLACEMENT

SCALE: NTS

DRAWING NO.: 46200611

REV ---

DRAWING FILE # NONE

SHEET: 5 OF 5

NOTE — INTERPRET ALL DRAWINGS IN ACCORDANCE WITH ANSI Y14.5-1982
1 REMOVE ALL SHARP EDGES

A) REFER TO ELEVATIONS PRINT FOR VERTICAL LOCATION OF COMPONENTS
B) FOR 110VAC LAYOUT REFER TO PRINT 4720-652
C) FOR A/V LAYOUT & DETAILS REFER TO PRINT 4720-004AMX
D) VANTARE' CONTROL SYSTEM (VCS)

E) NON BUS AIR COACH.

1 INSTALL IN TOEKICK
2 INSTALL IN UPPER CABINET
3 INSTALL IN LOWER CABINET
4 INSTALL ON OUTBOARD WALL.
5 INSTALL ON COLUMN
6 INSTALL ON CABINET FACE
7 INSTALL BEHIND CABINET
8 INSTALL IN MEDICINE CABINET
9 INSTALL IN BACKSPLASH
11 INSTALL UNDER BED
12 INSTALL ON BOTTOM OF CABINET
13 INSTALL UNDER SOFA
14 WIRE ONLY.
15 LIGHTS WILL ACTIVATE WHEN DOOR OPENS.
16 GPS DISPLAYED THROUGH 6.5 LCD MONITOR
17 5W HALOGEN IN DISPLAY CABINET.
18 ROPE LIGHTS IN DISPLAY CABINET.
20 THESE LIGHTS NOT OPERATIONAL WHEN SLIDE IS RETRACTED.
21 INSTALL IN OVERHEAD
22 CB 29WXST

MWV MICROWAVE OVEN
GPS GLOBAL POS. SATELLITE SYSTEM
LAS RADAR/LASER DETECTOR
ATC ANTENNA CONTROLLER
LCD LCD MONITOR (10.4 IN)
VCS VANTARE CONTROL SYSTEM
COF COFFEE MAKER.
CB CB R29WXST FULL WEATHERED
IHD INSTA HOT DISPENSOR
VOX EXTENSIS CELL PHONE STAND

DL DISPLAY CASE LIGHT (5w MAX)
GO GALLEY OVERHEAD LIGHT
GX GALLEY WORK LIGHT
RL READING LIGHT
SO STATEROOM OVERHEAD LIGHT
SL SHOWER LIGHT
BO BATHROOM OVERHEAD LIGHT
LV PRIVATE LAV. OVERHEAD LIGHT
SX SALON RT. OVERHEAD LIGHT
SY SALON LEFT OVERHEAD LIGHT
DO DINETTE OVERHEAD LIGHT

INSIDE CABINET LIGHT w/SWITCH
VIDEO INTERCOM.
SLIDE OUT CONTROLLER

S CRUISE AIR T-STAT
F EXHAUST FAN CONTROL
A AQUAHOT T-STAT
SD SMOKE DETECTOR
CM CARBON MONOXIDE DETECTOR
C.B. &/OR GPS REMOTE SPEAKER
TELEPHONE OUTLET
12 12VDC ACCESSORY OUTLET
V VANITY LIGHT (120V A.C.)
V STEPWELL LIGHT
MAP LIGHT

REVISIONS			
REV.	DESCRIPTION	DATE	APPROVAL
A	ADDED ANTENNA CONT. @ FRONT END OF SOFA	9/3/03	KSL
B	REMOVED TV LIFT SWITCH	9/3/03	KSL
C			
D			

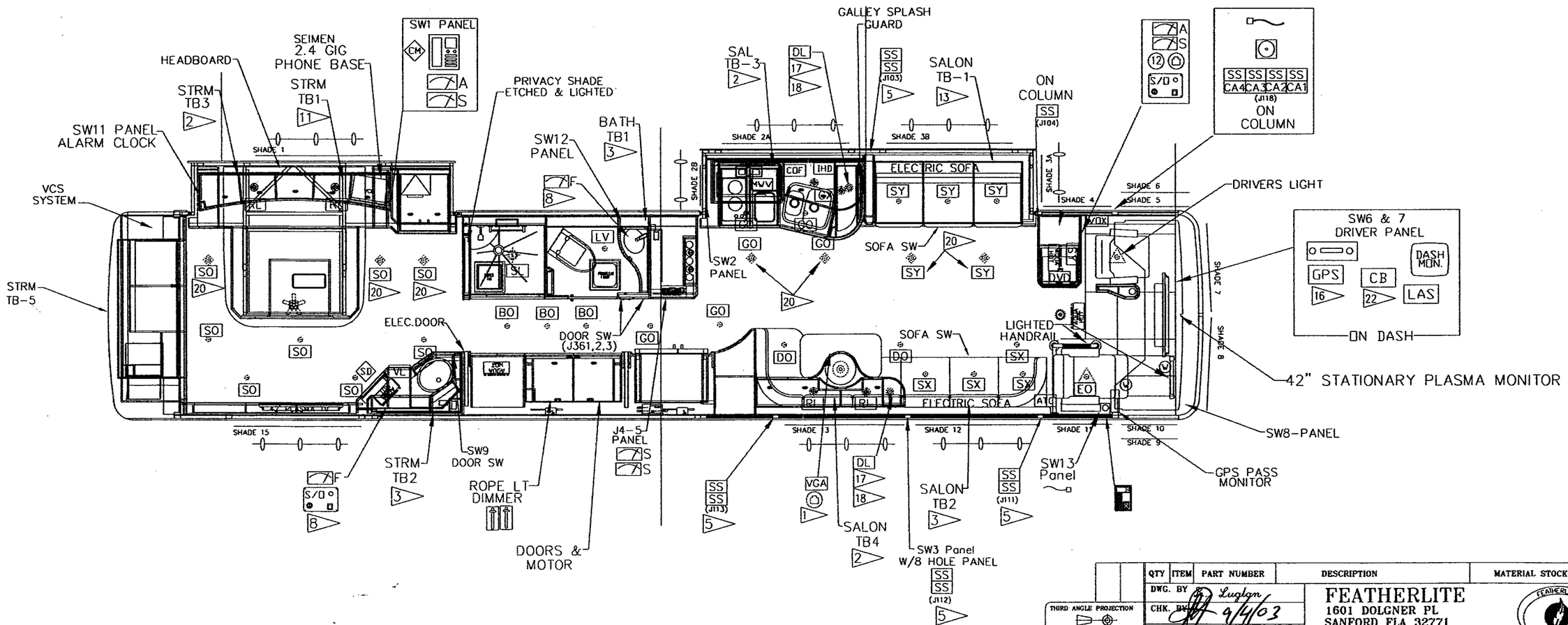

QTY	ITEM	PART NUMBER	DESCRIPTION	MATERIAL STOCK SIZE

HARDWARE LIST

ITEM	MATERIAL FINISH

CUSTOMER NAME: SANIBEL I -NON BUS AIR
CUSTOMER APPROVAL & DATE:

THIRD ANGLE PROJECTION
DO NOT SCALE DRAWING
TOLERANCES UNLESS OTHERWISE SPECIFIED:
ANGLES: ± 1/4°
FRACTIONS: ±1/64
DECIMALS: XX ±.010
DECIMALS: XXX ±.005

DWG. BY K. Luglan
CHK. BY 9/4/03
ENGR. BY K. Luglan
CHASIS. H3 45-S2
DATE : 7/30/03

PROPRIETARY NOTICE:
THIS DOCUMENT AND THE INFORMATION DISCLOSED ARE CONFIDENTIAL AND PROPRIETARY TO FEATHERLITE. DISCLOSURE OF SUCH INFORMATION IS EXPRESSLY FORBIDDEN WITHOUT OUR PRIOR WRITTEN PERMISSION

FEATHERLITE
1601 DOLGNER PL
SANFORD FLA 32771
TEL. 1-407-323-1120 FAX 1-407-323-1945

TITLE:
ELECTRICAL LAYOUT
D.C. LOCATIONS

SCALE: N/A
DRAWING NO.: SNBA-4620-651
REV B
DRAWING FILE # SNBA-4620-651B
SHEET: 1 OF 1

NOTE — INTERPRET ALL DRAWINGS IN ACCORDANCE WITH ANSI Y14.5-1982
1 REMOVE ALL SHARP EDGES

REVISIONS			
REV.	DESCRIPTION	DATE	APPROVAL
A	REMOVED HR2-C, CHANGED HR1-E TO HR1-D	9/3/03	KSL
B			
C			
D			

INDIVIDUAL BRANCH CIRCUITS:

- MW MICROWAVE OVEN
- WAS WASHER
- DRY DRYER
- CT COOK TOP (20A)

MULTIPLE RECEPTACLE/OUTLET CIRCUITS:

- HR1 HOUSE RECEPTACLE CIRCUIT 1
- HR2 HOUSE RECEPTACLE CIRCUIT 2
- HR3 HOUSE RECEPTACLE CIRCUIT 3
- AV AUDIO-VISUAL DEVICES
- REF REFRIGERATORS
- BED (H) BED HEATER (20A)
- LAV (H) BATH HEATER (20A)
- SAL (H) SALON HEATER (20A)

KITCHEN APPLIANCE CIRCUIT (ONE FEED 20A):

- HOT APL INSTAHOT WATER HEATER

GENERAL LIGHTING CIRCUIT (SEP. FEEDS 15A):

- VAN LGT (L) VANITY LIGHT
- CHAN LGT (L) CHANDELIER LIGHT

MOOD LIGHTING CIRCUIT (SEP. FEEDS 20A):

- FRO MOD [J] FWD ROPE LIGHT DIST. BOX
- RRO MOD [J] REAR ROPE LIGHT DIST. BOX

SWITCHED DEVICES CIRCUIT (SEP. FEEDS 15A):

- AIR SW [J] AIR COMPRESSOR

MISC UNSWITCHED CIRCUITS (ONE FEED 20A):

- LIFT MSC TV LIFT
- CEIL FAN (CF) CEILING FAN

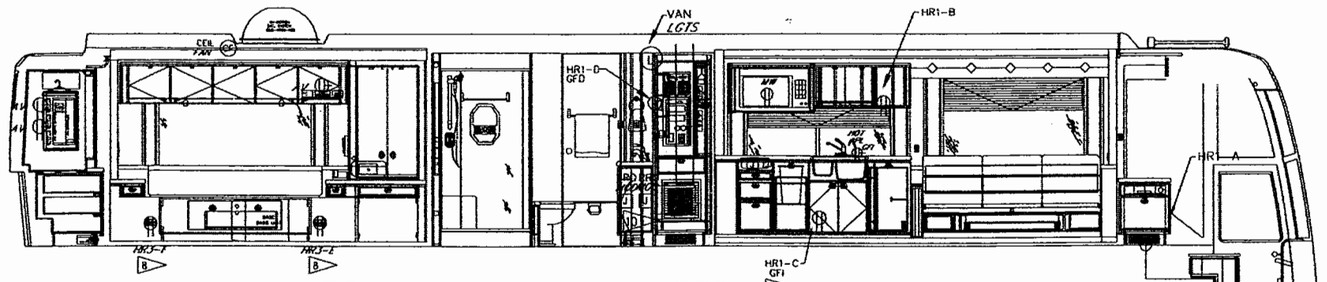

LEFT SIDE ABOVE FLOOR

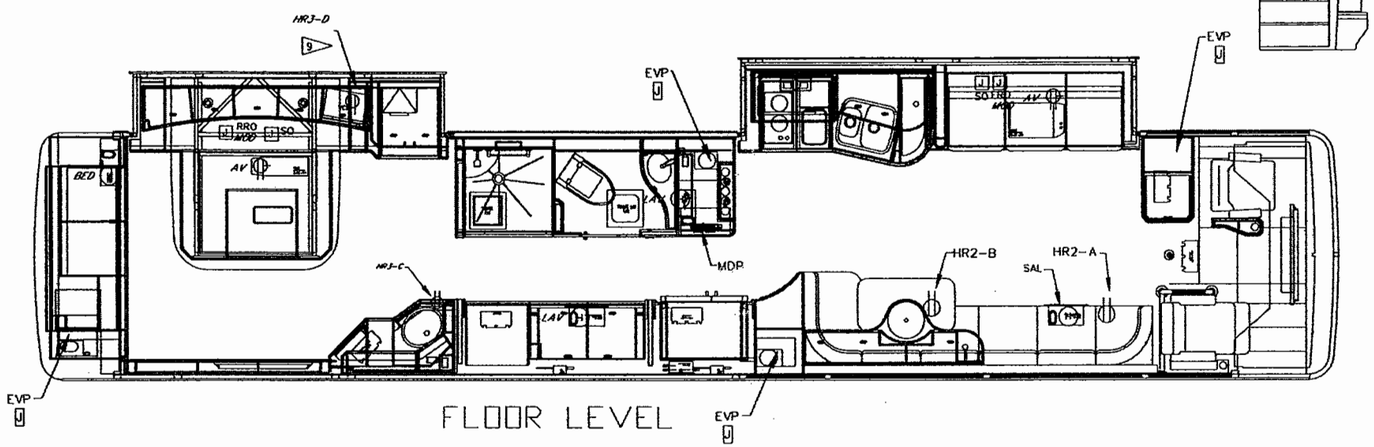

FLOOR LEVEL

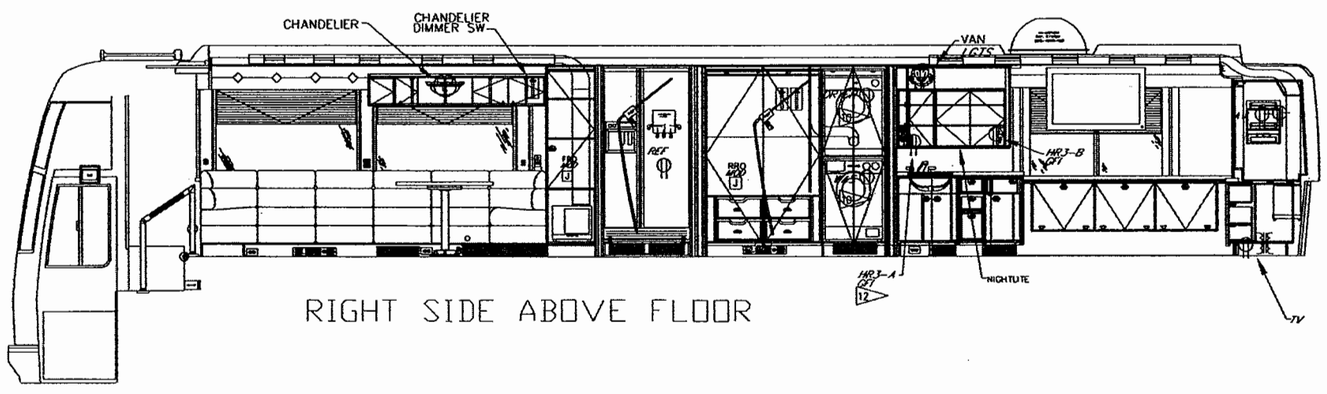

RIGHT SIDE ABOVE FLOOR

FRONT

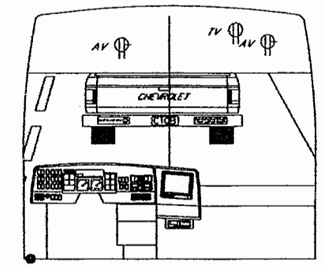

OTHER AC COMPONENTS:

- TV ISOLATED TV POWER
- EVP CRUISE AIR EVAPORATOR
- SO COILED CABLE TERMINATION
- DIMMER SWITCH
- ISOLATION TRANSFORMER

KEY:

- DUPLEX RECEPTACLE (15A)
- DUPLEX RECEPTACLE (20A)
- GFI GROUND FAULT RECEPTACLE
- (H) INTERNALLY TERMINATED: H=HEATER L=LIGHT M=MOTOR
- 2 X 4 J-BOX
- 4 X 4 J-BOX
- 4 X 4 EXTENDED J-BOX
- 6 X 6 J-BOX
- 8 X 8 J-BOX
- 12 X 10 X 6 J-BOX

HARDWARE LIST

1. DIMMER SW FOR THE FWD& AFT ROPE LIGHTING TOEKICK, & ABOVE CAB. 800 WATT SW.
2. INSTALL ON BACKSPLASH
3. INSTALL IN UPPER CABINET
4. INSTALL IN LOWER CABINET
5. INSTALL IN TOEKICK
6. INSTALL ON WALL
8. INSTALL ON FACE OF NIGHT STAND
9. INSTALL INSIDE OF NIGHT STAND
10. INSTALL ON OUTBOARD WALL
11. 1st GFI OUTLET IN SERIES.
12. INSTALL IN BOTTOM SIDE OF UPPER CABINET

ITEM	MATERIAL FINISH

CUSTOMER NAME: SANIBEL I NON-BUS AIR

CUSTOMER APPROVAL & DATE:

THIRD ANGLE PROJECTION

DO NOT SCALE DRAWING

TOLERANCES UNLESS OTHERWISE SPECIFIED:
ANGLES: ± 1/4°
FRACTIONS: ±1/64
DECIMALS: XX ±.010
DECIMALS: XXX ±.005

QTY	ITEM	PART NUMBER	DESCRIPTION	MATERIAL STOCK SIZE

DWG. BY L. Goldbourne

CHK. BY 9/4/03

ENGR. BY K. Luglan

CHASIS: H3 45-S2

DATE : 7/30/03

PROPRIETARY NOTICE:
THIS DOCUMENT AND THE INFORMATION DISCLOSED ARE CONFIDENTIAL AND PROPRIETARY TO FEATHERLITE. DISCLOSURE OF SUCH INFORMATION IS EXPRESSLY FORBIDDEN WITHOUT OUR PRIOR WRITTEN PERMISSION

FEATHERLITE
1601 DOLGNER PL
SANFORD FLA 32771
TEL. 1-407-323-1120 FAX 1-407-323-1945

TITLE:
ELECTRICAL LAYOUT
AC LOCATIONS

SCALE: N/A

DRAWING NO.: 4620-90600652

DRAWING FILE # 4620-90600652A

SHEET: 1 OF 1

REV A

REVISIONS			
REV.	DESCRIPTION	DATE	APPROVAL
A			
B			
C			
D			

INDIVIDUAL BRANCH CIRCUITS:

- AQ (H) AQUAHOT HEATING ELEMENT (20A)
- H2O (M) WATER PUMP (15A)

SWITCHED DEVICES CIRCUIT (SEP. FEEDS 15A):

- AIR SW [J] AIR COMPRESSOR

MISC UNSWITCHED CIRCUITS (ONE FEED 20A):

- AWN MSC (M) AWNING CONTROLLER BOXES

MULTIPLE RECEPTACLE/OUTLET CIRCUITS:

- BAY BAY RECEPTACLES
- AV AUDIO-VISUAL DEVICES
- REF REFRIGERATORS
- FRZR BAY FREEZERS
- HTR PBH [J] PLUMBING BAY HEATERS (20A)
- CBC BATTERY CHARGER
- BEQ BATTERY EQUALIZER
- IBS INVERTER BYPASS SWITCH
- IOB INVERTER OUTPUT BREAKER
- CM CABLE MASTER
- PIB PHONE INTERCONNECTION BOX
- M12B MAIN 12V DC BREAKER
- B BAY THERMOSTAT
- BAY ELEC. HEATERS

OTHER AC COMPONENTS:

- ISOLATION TRANSFORMER
- BLW [J] GENERATOR BLOWER
- SHR [J] SHORE POWER BREAKERS
- GEN [J] GENERATOR CONTROL BOX
- SHORE COAX CABLE CONN
- SHORE PHONE LINE

KEY:

- DUPLEX RECEPTACLE (15A)
- DUPLEX RECEPTACLE (20A)
- GFI GROUND FAULT RECEPTACLE
- (H) INTERNALLY TERMINATED: H=HEATER M=MOTOR L=LIGHT
- [J] 2 X 4 J-BOX
- [J] 4 X 4 J-BOX
- [J] 4 X 4 EXTENDED J-BOX
- [J] 6 X 6 J-BOX
- [J] 8 X 8 J-BOX
- [J] 12 X 10 X 6 J-BOX

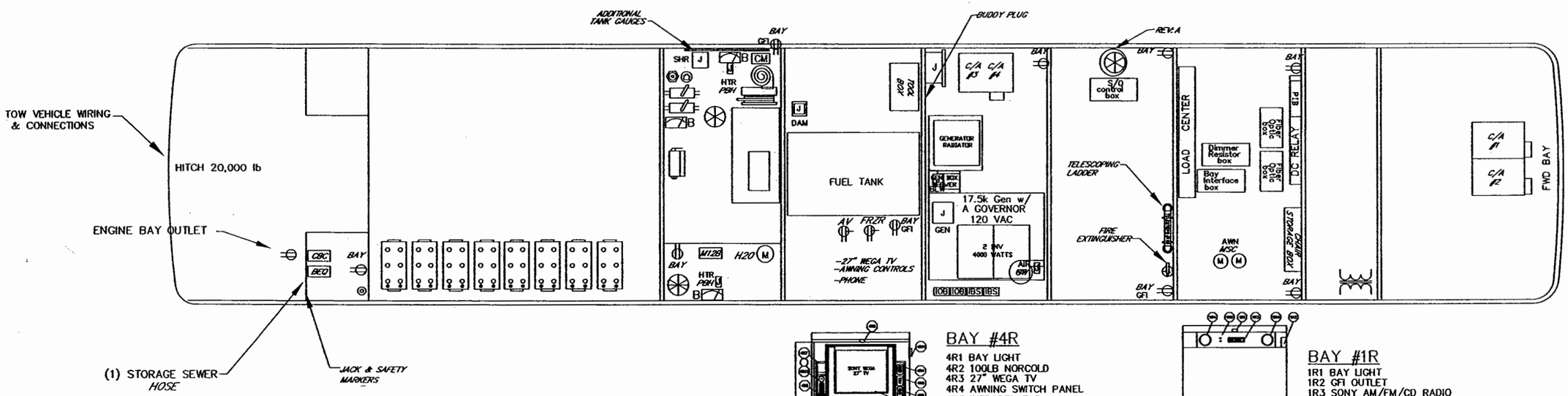

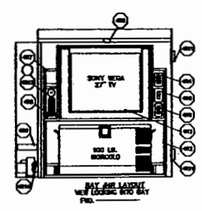

BAY #4R

4R1 BAY LIGHT
4R2 100LB NORCOLD
4R3 27" WEGA TV
4R4 AWNING SWITCH PANEL
4R5 INFRARED EYE
4R6 GFI OUTLET
4R7 SMALL STORAGE AREA
4R8 GIG HTZ PHONE
4R9 CURRENT SENSOR BOX
4R10 SQUIRREL CAGE BLOWER
4R11 SUPPLY-AIR GRILL (4x4)
4R12 PHONE JACK

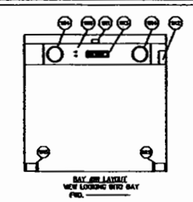

BAY #1R

1R1 BAY LIGHT
1R2 GFI OUTLET
1R3 SONY AM/FM/CD RADIO
1R4 SPEAKERS
1R5 CHAIR STORAGE
1R6 INFRARED EYE

HARDWARE LIST

ITEM	MATERIAL FINISH

CUSTOMER NAME: SANIBEL 1, NON BUS-AIR

CUSTOMER APPROVAL & DATE:

THIRD ANGLE PROJECTION

DO NOT SCALE DRAWING

TOLERANCES UNLESS OTHERWISE SPECIFIED:
ANGLES: ± 1/4°
FRACTIONS: ±1/64
DECIMALS: XX ±.010
DECIMALS: XXX ±.005

QTY	ITEM	PART NUMBER	DESCRIPTION	MATERIAL STOCK SIZE

DWG. BY K.S.
CHK. BY
ENGR. BY K. LUGLAN
8/2/03

CHASSIS: H3-45 S2

DATE : 8/4/03

PROPRIETARY NOTICE:
THIS DOCUMENT AND THE INFORMATION DISCLOSED ARE CONFIDENTIAL AND PROPRIETARY TO FEATHERLITE. DISCLOSURE OF SUCH INFORMATION IS EXPRESSLY FORBIDDEN WITHOUT OUR PRIOR WRITTEN PERMISSION

FEATHERLITE
1601 DOLGNER PL
SANFORD FLA 32771
TEL. 1-407-323-1120 FAX 1-407-323-1945

TITLE:
ELECTRICAL LAYOUTS
BAY LOCATION

SCALE: N/A

DRAWING NO.: SNBA-4733-653

DRAWING FILE # SNBA-4720-653

SHEET: 1 OF 1

REV —

REVISIONS			
REV.	DESCRIPTION	DATE	APPROVAL
A			
B			
C			
D			

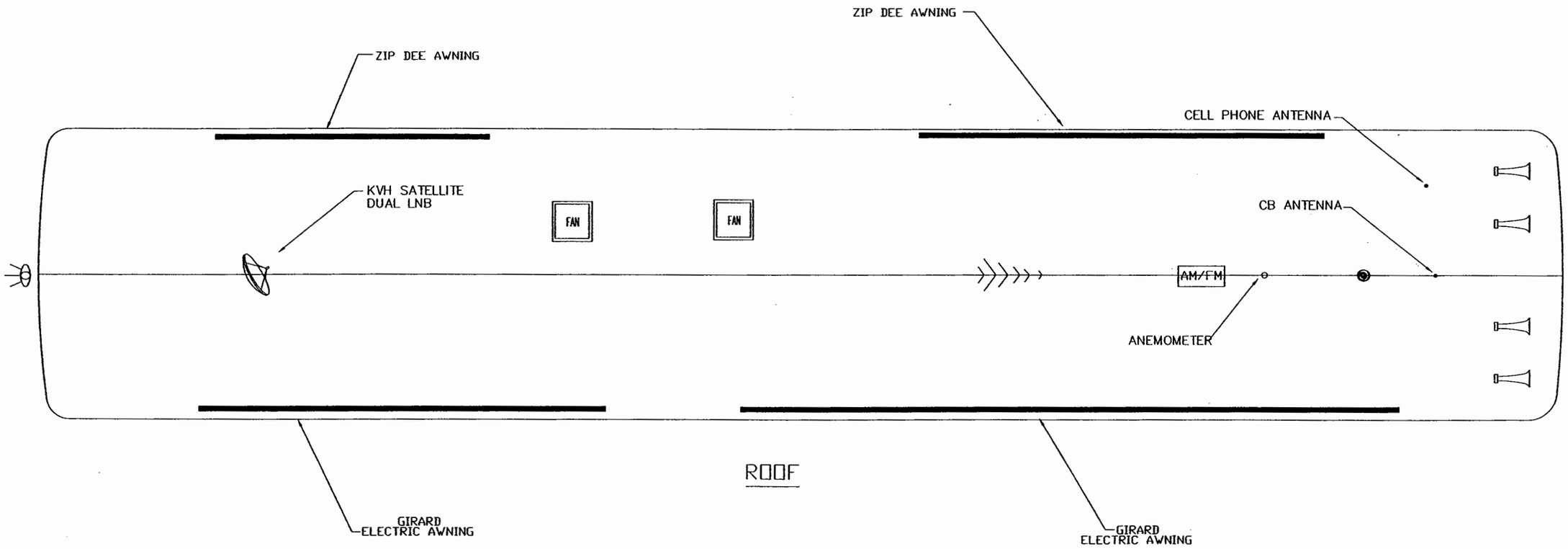

HARDWARE LIST

ITEM	MATERIAL FINISH

CUSTOMER NAME: SANIBEL I NON-BUS AIR

CUSTOMER APPROVAL & DATE:

THIRD ANGLE PROJECTION

DO NOT SCALE DRAWING

TOLERANCES UNLESS OTHERWISE SPECIFIED:
ANGLES: ± 1/4°
FRACTIONS: ±1/64
DECIMALS: XX ±.010
DECIMALS: XXX ±.005

QTY	ITEM	PART NUMBER	DESCRIPTION	MATERIAL STOCK SIZE

DWG. BY K. Luglan

CHK. BY

ENGR. BY K. Luglan

CHASSIS: H3 45-S2

DATE : 7/30/03

PROPRIETARY NOTICE:

THIS DOCUMENT AND THE INFORMATION DISCLOSED ARE CONFIDENTIAL AND PROPRIETARY TO FEATHERLITE. DISCLOSURE OF SUCH INFORMATION IS EXPRESSLY FORBIDDEN WITHOUT OUR PRIOR WRITTEN PERMISSION

FEATHERLITE
1601 DOLGNER PL
SANFORD FLA. 32771
TEL. 1-407-323-1120 FAX 1-407-323-1945

TITLE:
ELECTRICAL LAYOUTS
ROOF LOCATIONS

SCALE: N/A

DRAWING NO.: 4620-9060654

DRAWING FILE # 4620-9060654

SHEET: 1 OF 1

REV –

NOTE — INTERPRET ALL DRAWINGS IN ACCORDANCE WITH ANSI Y14.5-1982
1 REMOVE ALL SHARP EDGES

REVISIONS			
REV.	DESCRIPTION	DATE	APPROVAL
A			
B			
C			
D			

SW1 FRONT STATEROOM

	1	5	9
SHADE 1 (X)	STATEROOM OVERHEAD LIGHTS	STATEROOM ACCENT LIGHTS	EXTERIOR LIGHT OVER-RIDE
SHADE 15 (X)	BATHROOM OVERHEAD LIGHTS	FIBEROPTICS *	UNDER SLIDEOUT LIGHTS *
SHADE MASTER (X)	AFT INDIRECT LIGHTS	CEILING FAN *	LIGHTS MASTER
SPARE (X)	DIESEL HEAT HOT WATER	VANITY LIGHT *	PANEL LIGHTS
4 (P101)	4	8	12

SW2 GALLEY

	4	7	10
GALLEY OVERHEAD LIGHTS	GALLEY WORK LIGHTS *	SALON LEFT LIGHTS	SALON RIGHT LIGHTS
CARPET FIBEROPTICS *	SALON DISPLAY LIGHTS *	FORWARD INDIRECT LIGHTS	LIGHTS MASTER
DINETTE CHANDELIER *	FIBEROPTICS *	FIBER OPTIC COLOR *	PANEL LIGHTS
3	6	9	10

SW3 SALON

	1	4	
	SALON LEFT LIGHTS	SALON RIGHT LIGHTS	
3	SALON ACCENT LIGHTS *	DINETTE CHANDELIER *	6
	DINETTE OVERHEAD LIGHTS *	SALON DISPLAY LIGHTS *	
	SALON SHADE 12	SALON SHADE 13	
	(J112)		

SW4/5 CONTROL PANEL

1	6	11
FILLER PLUG	FILLER PLUG	FILLER PLUG
GENERATOR PREHEAT (5)	FRESH WATER FILL (5)	DIESEL HEAT HOT WATER (4)
GENERATOR START (5) 6	WATER PUMP (4)	ENGINE BLOCK HEATER (5) *
GENERATOR STOP (5)	SHADE MASTER (4) *	SPARE (5) *
SPARE (4) *	SPARE (4) *	PANEL LIGHTS (4)
5	10	15

SW6/7 DASH

	1	3	5	7
S1	EXTERIOR LIGHT OVER-RIDE (6) *	ENG BATT BOOST (6) *	AIR COMP (6) *	AIR SLIDE (6)
S2	ANT SHORE ALM (6) *	GEN PREHEAT (6)	GEN START (6)	GEN STOP (6)
	2	4	6	8
	D	C	B	A

	9	11	13	15
S3	SALON LEFT LIGHTS (7)	SALON RIGHT LIGHTS (7)	GALLEY O/H LIGHTS (6) *	FRWD INDIR LIGHTS (7)
S4	ENTRY O/H LIGHTS (6) *	STEP WELL LIGHTS (7)	LIGHTS MASTER (7)	PANEL LIGHTS (7)
	10	12	14	16
	D	C	B	A

SW8 STEPWELL PANEL

1	4	7	10
SHADE 10 *	EXT LEFT	EXT RIGHT *	ENTRY LIGHT *
BAY LOCK *	SALON LEFT	SALON RIGHT	LIGHTS MASTER
BAY UNLOCK *	BAY LIGHT DEFEAT *	STEP WELL LIGHTS	PANEL LIGHTS
3	6	9	12

ELECTRIC DOORS

DOOR SWITCH (2) — (J361) (J364)

DOOR SWITCH (1) — (J362) (J363)

SW9 BATH

	1	5
	BATHROOM OVERHEAD LIGHTS	VANITY LIGHT *
	STATEROOM OVERHEAD LIGHTS	GALLEY OVERHEAD LIGHTS
	PRIVACY SHADE *	SHOWER LIGHT *
	BATHROOM FAN *	NIGHT LIGHT *
	4	8

SW10 PLUMBING BAY LEFT

1	4	7	10
FILLER PLUG	GRAY DUMP	BLACK DUMP	FILLER PLUG
FRESH WATER FILL	WATER PUMP	EXTERIOR LEFT LIGHTS	UNDER SLIDEOUT LIGHTS *
GENERATOR PREHEAT	GENERATOR START	GENERATOR STOP	PANEL LIGHTS
3	6	9	12

PLUMBING BAY RIGHT

EXTERIOR LIGHTS (X)

(J151)

SW11 REAR STATEROOM

1	1	5	9
SHADE 1 (X)	GENERATOR PREHEAT	STATEROOM OVERHEAD LIGHTS	EXTERIOR LIGHT OVERRIDE
SHADE 15 (X)	GENERATOR START	AFT INDIRECT LIGHTS	CEILING FAN *
SHADE MASTER (X)	GENERATOR STOP	STATEROOM ACCENT LIGHTS	LIGHTS MASTER
SPARE (X)	DIESEL HEAT HOT WATER	BATHROOM OVERHEAD LIGHTS	PANEL LIGHTS
4 (P115)	4	8	12

SW12 PRIVATE LAV

1
OVERHEAD & VANITY LIGHT *
PRIVATE LAV FAN *
WATER PUMP
3

SW13 PASSENGER

1
AIR SLIDE
ENTRY OVERHEAD LIGHTS *
SHADE 11 *
3

MDP REMOTE CONTROL

C/A #1 201	C/A #2 202	HEATER SALON 205	SPARE 206
HEATER MAIN & PRIV LAVATORY 209	HEATER PLUMBING BAY 210	INSTA-HOT 213	WASHER & DRYER 214
AIR COMP./BATTERY CHARGER 217	AWNING CEILING FAN TV LIFT 218	LIGHTING GENERAL 221	LIGHTING MOOD 222
OUTLETS REAR 225	OUTLETS BAY 226	FILLER PLUG	FILLER PLUG
FILLER PLUG	FILLER PLUG	FILLER PLUG	FILLER PLUG

C/A #3 203	C/A #4 204	HEATER STATEROOM 207	HEATER GALLEY & STORE BAY 208
COOKTOP GALLEY 211	WATER HEATER 212	MICROWAVE 215	REFRIG-ERATORS 216
AUDIO & VIDEO 219	WATER PUMP 220	OUTLETS LEFT 223	OUTLETS RIGHT 224
FILLER PLUG	FILLER PLUG	FILLER PLUG	FILLER PLUG
FILLER PLUG	FILLER PLUG	SHORE/RED GEN/GRN 239	POWER MGNT ON/OFF 240

SHADES

DRIVER'S COLUMN AND A/C CUTOFF

1	2	3	4	
SHADE 3 (X)	SHADE 4 (X)	SHADE 11 (X)	SHADE 12 (X)	(J118)
C/AIR 4 DEFEAT (X)	C/AIR 3 DEFEAT (X)	C/AIR 2 DEFEAT (X)	C/AIR 1 DEFEAT (X)	(J108)

SALON LEFT

SHADE 2 (X)	SHADE 4 (X)
SHADE 3 (X)	
(J103)	(J104)

DASH

S1	SHADE 5 (X)	SHADE 7 (X)	SHADE 8 (X)	SHADE 9 (X)
S2	SHADE 6 (X)	SHADE MSTR (X)	SPARE (X)	SHADE 10 (X)
	D	C	B	A

SALON RIGHT

SHADE 13 (X)
SHADE 14 (X)
(J113)

NOTES:
1. ANGLED CORNERS INDICATE MAINTAINED SWITCHES
2. NONSTANDARD SWITCHES ARE MARKED ⌓
3. SWITCHES THAT CAN BE INDIVIDUALLY WIRED ARE MARKED *
4. SWITCHES THAT DO NOT BICOLOR ARE MARKED X

HARDWARE LIST

ITEM	MATERIAL FINISH

CUSTOMER NAME: SANIBEL I NON-BUS AIR

CUSTOMER APPROVAL & DATE:

THIRD ANGLE PROJECTION

DO NOT SCALE DRAWING

TOLERANCES UNLESS OTHERWISE SPECIFIED:
ANGLES: ± 1/4°
FRACTIONS: ±1/64
DECIMALS: XX ±.010
DECIMALS: XXX ±.005

QTY	ITEM	PART NUMBER	DESCRIPTION	MATERIAL STOCK SIZE

DWG. BY L. Goldbarne

CHK. BY

ENGR. BY K. Luglan 7/24/03

CHASSIS: H3-45-S2

DATE : 7/30/03

PROPRIETARY NOTICE:
THIS DOCUMENT AND THE INFORMATION DISCLOSED ARE CONFIDENTIAL AND PROPRIETARY TO FEATHERLITE. DISCLOSURE OF SUCH INFORMATION IS EXPRESSLY FORBIDDEN WITHOUT OUR PRIOR WRITTEN PERMISSION

FEATHERLITE
1601 DOLGNER PL
SANFORD FLA 32771
TEL 1-407-323-1120 FAX 1-407-323-1945

TITLE:
LAYOUT,
COACH SWITCH CLUSTERS

SCALE: NONE

DRAWING NO.: 4620-9060655

DRAWING FILE # 4620-9060655

SHEET: 1 OF 1

REV —

NOTE — INTERPRET ALL DRAWINGS IN ACCORDANCE WITH ANSI Y14.5-1982
1 REMOVE ALL SHARP EDGES

REVISIONS			
REV.	DESCRIPTION	DATE	APPROVAL
A	RELOCATED ANTENNA CONTROLLER AND VGA, REMOVED TV LIFT SW.	8/3/03	KSL
B			
C			
D			

AUDIO/VIDEO COMPONENTS

- ATC ANTENNA CONTROLER
- IRR INFRA RED RECEIVER
- IRE INFRA-RED EYE
- AVS NILES AVS-2 VIDEO SWITCH
- DSR DIGITAL SATELLITE RECEIVER
- CDC CD CHANGER
- BOS BOSE STEREO AM/FM/CD
- SUB BOSE AMP / SUB WOOFER
- D/C BOSE SPEAKER CUBES (DOUBLE)
- MID BOSE CENTER SPEAKER
- 6" 6" 2-WAY SPEAKERS
- VCS VANTARE' CONTROL SYSTEM
- VLA AUDIO/VIDEO LINE AMPLIFIER
- DVD DVD PLAYER
- VCR VCR
- PIO PIONEER AM/FM/LCD STEREO
- 42P 42" PLASMA MONITOR
- VID VIDEO INTERCOM
- A/B SHORELINE/ANTENNA CABLE SWITCH
- RFA RF VIDEO AMPLIFIER
- TEL TELEPHONE OUTLET
- LCD 10.4" LCD MONITOR
- GPS GLOBAL POSITIONING SYSTEM
- LIFT TV LIFT SWITCH
- VGA VGA TO FWD. PLASMA

AMX COMPONENTS

ACT	SYSTEM CONTROLLER	ACCENT 3
VSS	VIDEO SYNC SENSOR	VSS2
SVT	KNOX 8X8 MATRIX SWITCHER	RS-8X8
AXB	TV CONTROLLER	AXB-TC
IRR	INFRA RED RECEIVER	AXR-IRSM

NOTES: (UNLESS OTHERWISE SPECIFIED)

1. THIS IS A REFERENCE DOCUMENT TO SHOW THE APPROXIMATE LOCATION OF ALL ENTERTAINMENT COMPONENTS THAT ARE TO BE INSTALLED BY FEATHERLITE. THIS DOCUMENT WILL ONLY SHOW EQUIPMENT INSTALLED BY FEATHERLITE LUXURY COACHES.
2. REF SPECIFIC COACH ELECTRICAL LAYOUT FOR LOCATION OF EQUIPMENT TO BE MOUNTED ON THE ROOF
3. BOSE LIFSTYLE 35 SOUND SYSTEM
4. BOSE CENTER SPEAKER (DOUBLE CUBE) MOUNTED IN FRONT OVERHEAD CONSOLE
5. BOSE SPEAKERS (DOUBLE CUBE) MOUNTED IN CUSTOM BOXES AT ENDS OF VALANCE
6. 6.5" TWO WAY SPEAKER DRIVEN FROM DRIVER STEREO MOUNTED ON BOTTOM SIDE OF OVERHEAD
7. INSTALL IN CABINET
8. INSTALL IN TOEKICK
9. INSTALL ON WALL
10. INSTALL IN OVERHEAD CONSOLE
11. INSTALL ON COLUMN

SALON A/V EQUIPMENT

42" PLASMA
- INFRA-RED EYE
- IR RECEIVER

BOSE LIFESTYLE 35 MUSIC CENTER
- INFRA-RED EYE

VCR #1
- VIDEO SYNC SENSOR (@ SR)
- INFRA- RED EYE

DVD
- VIDEO SYNC SENSOR
- INFRA- RED EYE

A/B SWITCH (SHORE/ANT.)
RF AMPLIFIER w/ POWER TRANS.
RF SPLITTER
AM/FM/LCD MONITOR @ DRIVER

STATEROOM A/V EQUIPMENT

42" PLASMA MONITOR
- INFRA-RED EYE
- IR RECEIVER

DSR
- VIDEO SYNC SENSOR
- INFRA-RED EYE

VCR #2
- VIDEO SYNC SENSOR (@ SR)
- INFRA-RED EYE

AXCENT 3 CONTROLLER
KNOX 8x8 MATRIX SWITCHER
BOSE SUBWOOFER
BOSE DOUBLE-CUBE SPEAKERS (2)

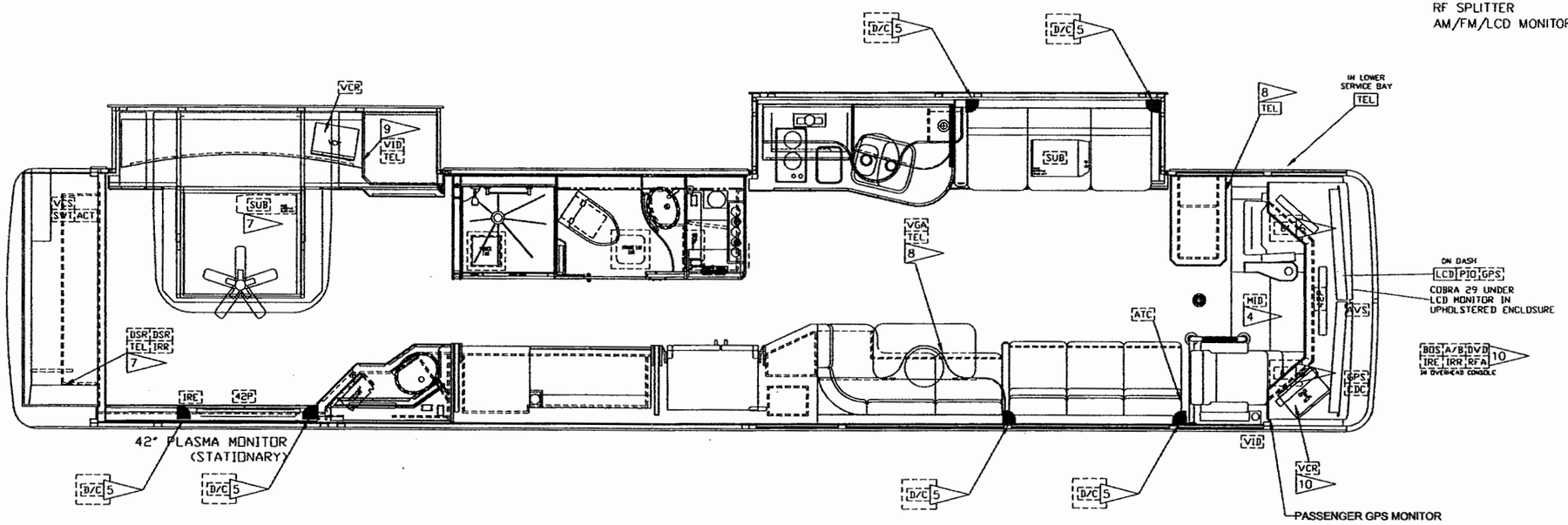

HARDWARE LIST

QTY	ITEM	PART NUMBER	DESCRIPTION	MATERIAL STOCK SIZE

PRELIMINARY
THE INFORMATION CONTAINED ON THIS DRAWING IS PRELIMINARY AND IS FOR REVIEW AND EVALUATION PURPOSES ONLY. NO PARTS ARE TO BE MANUFACTURED FROM THIS DRAWING

ITEM	MATERIAL FINISH

CUSTOMER NAME: SANIBEL I W/O BUS AIR
CUSTOMER APPROVAL & DATE:

THIRD ANGLE PROJECTION
DO NOT SCALE DRAWING

TOLERANCES UNLESS OTHERWISE SPECIFIED:
ANGLES: ± 1/4°
FRACTIONS: ±1/64
DECIMALS: XX ±.010
DECIMALS: XXX ±.005

DWG. BY K. Luglan
CHK. BY 9/4/03
ENGR. BY K. Luglan
CHASSIS: H3-45-S2
DATE : 7/30/03

PROPRIETARY NOTICE:
THIS DOCUMENT AND THE INFORMATION DISCLOSED ARE CONFIDENTIAL AND PROPRIETARY TO FEATHERLITE. DISCLOSURE OF SUCH INFORMATION IS EXPRESSLY FORBIDDEN WITHOUT OUR PRIOR WRITTEN PERMISSION

FEATHERLITE
1601 DOLGNER PL
SANFORD FLA 32771
TEL. 1-407-323-1120 FAX 1-407-323-1945

TITLE:
ELECTRICAL LAYOUT
A/V EQUIPMENT

SCALE: N/A
DRAWING NO.: 4620-004AMX
DRAWING FILE # 4620-004AMXA
SHEET: 1 OF 4
REV A

NOTE — INTERPRET ALL DRAWINGS IN ACCORDANCE WITH ANSI Y14.5-1982
1 REMOVE ALL SHARP EDGES

REVISIONS			
REV.	DESCRIPTION	DATE	APPROVAL
A	RELOCATED ANTENNA CONTROLLER AND VGA, REMOVED TV LIFT SW.	9/3/03	KSL
B			
C			
D			

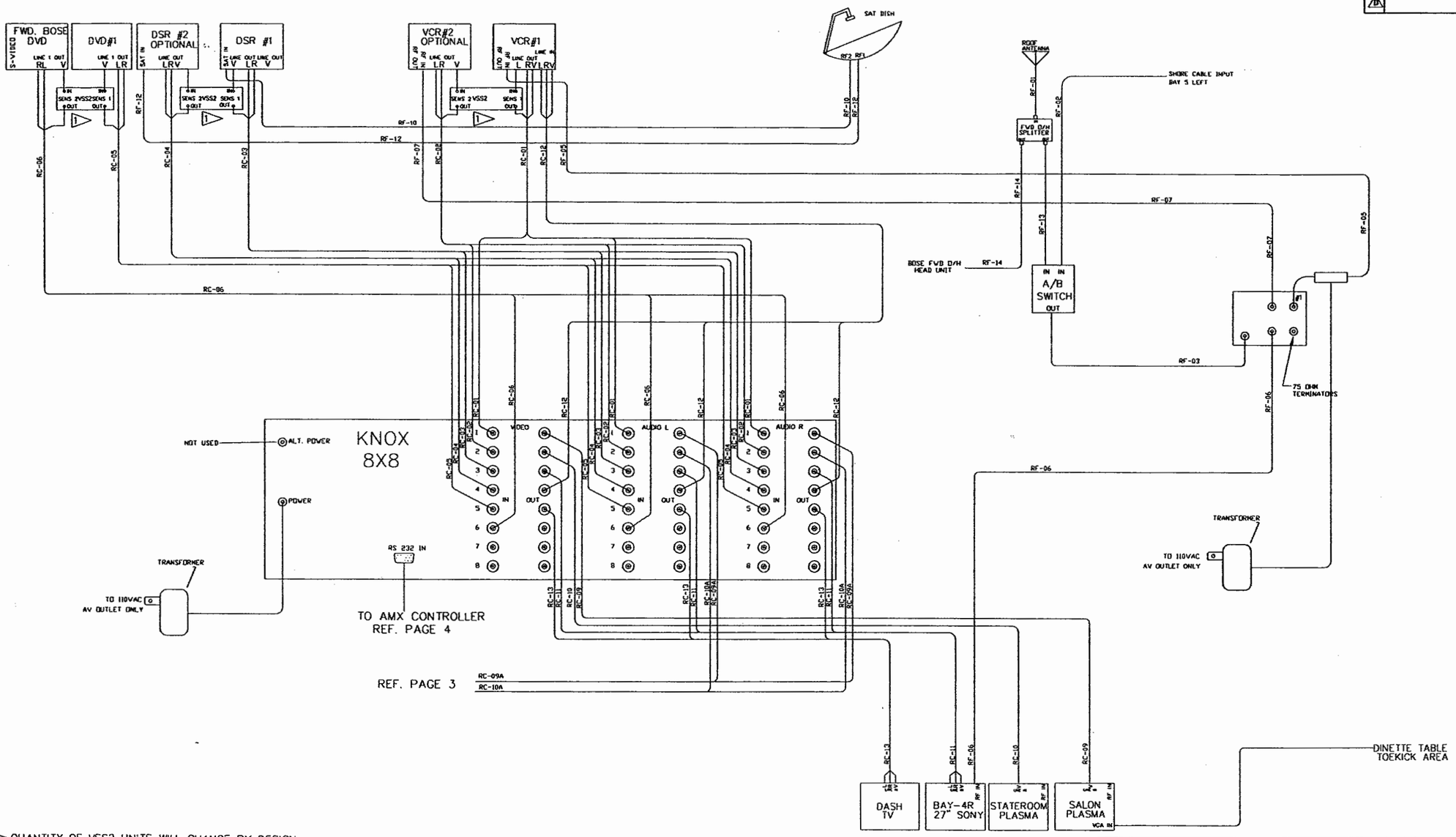

NOTES:

1. QUANTITY OF VSS2 UNITS WILL CHANGE BY DESIGN USE ONLY 1 UNIT FOR 2 SOURCES
2. FOR EQUIPMENT LOCATIONS REFER TO PAGE 1 OF THIS PRINT
3. FOR AUDIO SYSTEM CONNECTIONS REFER TO PAGE 3 OF THIS PRINT
4. FOR AMX SYSTEM COMPONENTS CONNECTION REFER TO PAGE 4 OF THIS PRINT
5. REF. WIRELIST WL-10007-(4620-007AMX) FOR WIRE/CABLE DESCRIPTION

HARDWARE LIST

ITEM	MATERIAL FINISH

PRELIMINARY
THE INFORMATION CONTAINED ON THIS DRAWING IS PRELIMINARY AND IS FOR REVIEW AND EVALUATION PURPOSES ONLY NO PARTS ARE TO BE MANUFACTURED FROM THIS DRAWING

CUSTOMER NAME: SANIBEL I W/O BUS AIR
CUSTOMER APPROVAL & DATE:

THIRD ANGLE PROJECTION
DO NOT SCALE DRAWING
TOLERANCES UNLESS OTHERWISE SPECIFIED:
ANGLES: ± 1/4°
FRACTIONS: ±1/64
DECIMALS: XX ±.010
DECIMALS: XXX ±.005

QTY	ITEM	PART NUMBER	DESCRIPTION	MATERIAL STOCK SIZE

DWG. BY K. Luglan
CHK. 9/4/03
ENGR. BY K. Luglan
CHASSIS: H3-45-S2
DATE : 7/30/03

PROPRIETARY NOTICE:
THIS DOCUMENT AND THE INFORMATION DISCLOSED ARE CONFIDENTIAL AND PROPRIETARY TO FEATHERLITE. DISCLOSURE OF SUCH INFORMATION IS EXPRESSLY FORBIDDEN WITHOUT OUR PRIOR WRITTEN PERMISSION

FEATHERLITE
1601 DOLGNER PL
SANFORD FLA 32771
TEL. 1-407-323-1120 FAX 1-407-323-1945

TITLE:
ELECTRICAL LAYOUT
A/V EQUIPMENT

SCALE: N/A
DRAWING NO.: 4620-004AMX
DRAWING FILE # 4620-004AMXA
SHEET: 2 OF 4
REV A

NOTE — INTERPRET ALL DRAWINGS IN ACCORDANCE WITH ANSI Y14.5-1982
1 REMOVE ALL SHARP EDGES

REVISIONS			
REV.	DESCRIPTION	DATE	APPROVAL
A	RELOCATED ANTENNA CONTROLLER AND VGA, REMOVED TV LIFT SW.	9/3/03	KSL
B			
C			
D			

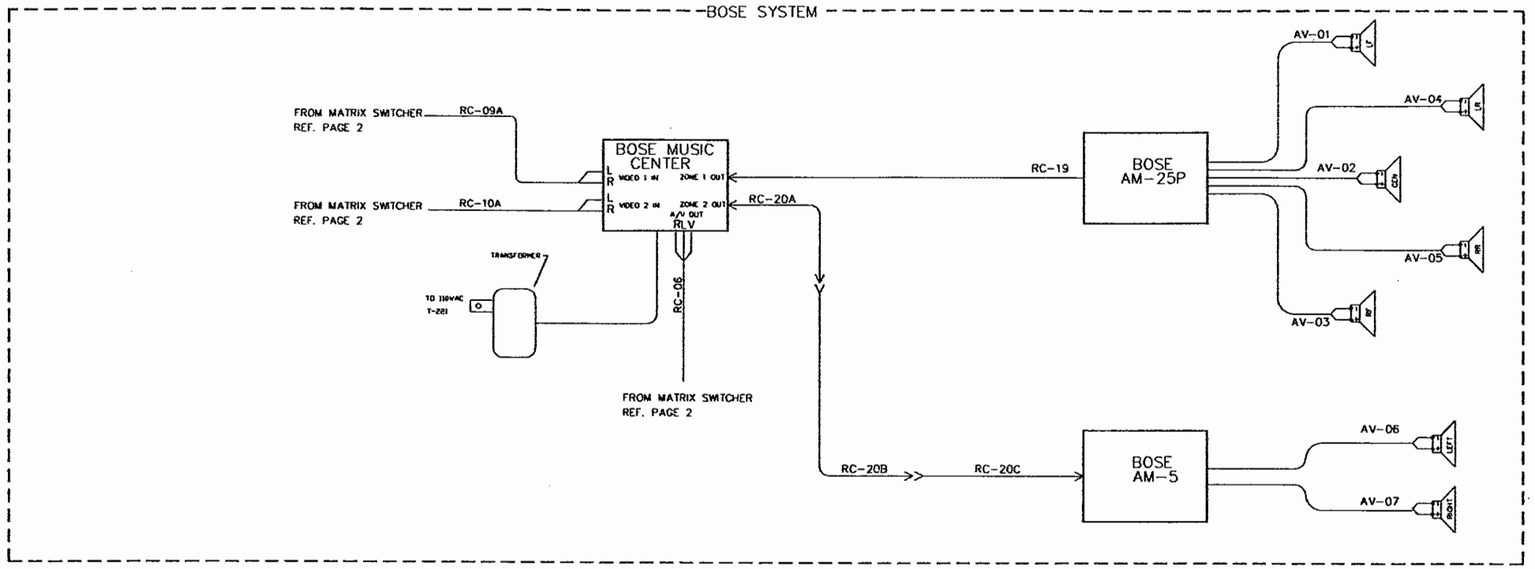

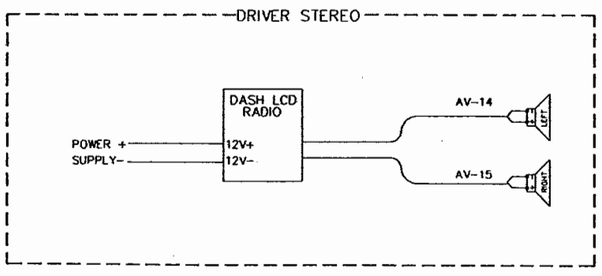

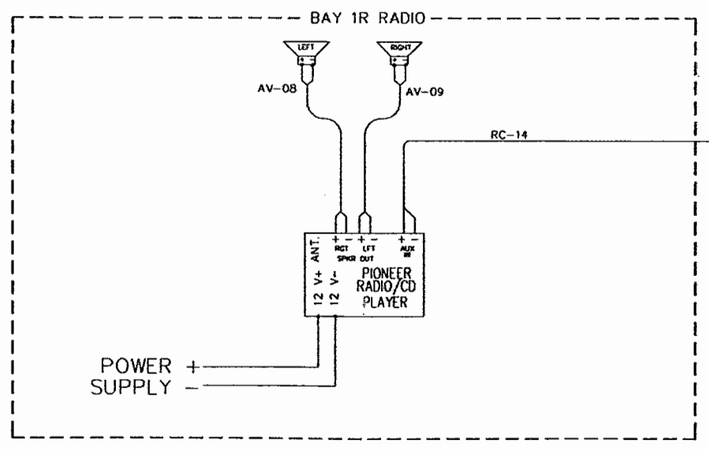

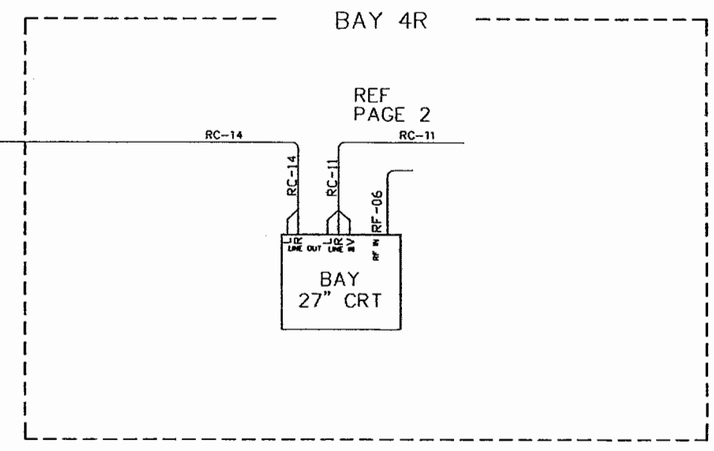

NOTES:

FOR EQUIPMENT LOCATIONS REFER TO PAGE 1 OF THIS PRINT
FOR AUDIO/VIDEO ROUTING SWITCHER CONNECTIONS REFER TO PAGE 2 OF THIS PRINT
FOR AMX SYSTEM COMPONENTS CONNECTION REFER TO PAGE 4 OF THIS PRINT
REF. WIRELIST WL-10007-(4620-007AMX) FOR WIRE/CABLE DESCRIPTION

HARDWARE LIST

ITEM	MATERIAL FINISH

PRELIMINARY
THE INFORMATION CONTAINED ON THIS DRAWING IS PRELIMINARY AND IS FOR REVIEW AND EVALUATION PURPOSES ONLY NO PARTS ARE TO BE MANUFACTURED FROM THIS DRAWING

CUSTOMER NAME: SANIBEL I W/O BUS AIR
CUSTOMER APPROVAL & DATE:

THIRD ANGLE PROJECTION
DO NOT SCALE DRAWING
TOLERANCES UNLESS OTHERWISE SPECIFIED:
ANGLES ± 1/4°
FRACTIONS ±1/64
DECIMALS: XX ±.010
DECIMALS: XXX ±.005

QTY	ITEM	PART NUMBER	DESCRIPTION	MATERIAL STOCK SIZE

DWG. BY K. Luglan
CHK. 9/4/03
ENGR. BY K. Luglan
CHASIS: H3-45-S2
DATE : 7/30/03

PROPRIETARY NOTICE:
THIS DOCUMENT AND THE INFORMATION DISCLOSED ARE CONFIDENTIAL AND PROPRIETARY TO FEATHERLITE. DISCLOSURE OF SUCH INFORMATION IS EXPRESSLY FORBIDDEN WITHOUT OUR PRIOR WRITTEN PERMISSION

FEATHERLITE
1601 DOLGNER PL
SANFORD FLA 32771
TEL. 1-407-323-1120 FAX 1-407-323-1945

TITLE:
ELECTRICAL LAYOUT
A/V EQUIPMENT

SCALE: N/A
DRAWING NO.: 4620-004AMX
REV A
DRAWING FILE # 4620-004AMXA
SHEET: 3 OF 4

NOTE — INTERPRET ALL DRAWINGS IN ACCORDANCE WITH ANSI Y14.5-1982
1 REMOVE ALL SHARP EDGES

REVISIONS			
REV.	DESCRIPTION	DATE	APPROVAL
A	RELOCATED ANTENNA CONTROLLER AND VGA, REMOVED TV LIFT SW.	9/3/03	KSL
B			
C			
D			

NOTES:

FOR EQUIPMENT LOCATIONS REFER TO PAGE 1 OF THIS PRINT
FOR AUDIO/VIDEO ROUTING SWITCHER CONNECTIONS REFER TO PAGE 2 OF THIS PRINT
FOR AUDIO SYSTEM CONNECTIONS REFER TO PAGE 3 OF THIS PRINT
REF. WIRELIST WL-10007-(4620) FOR WIRE/CABLE DESCRIPTION

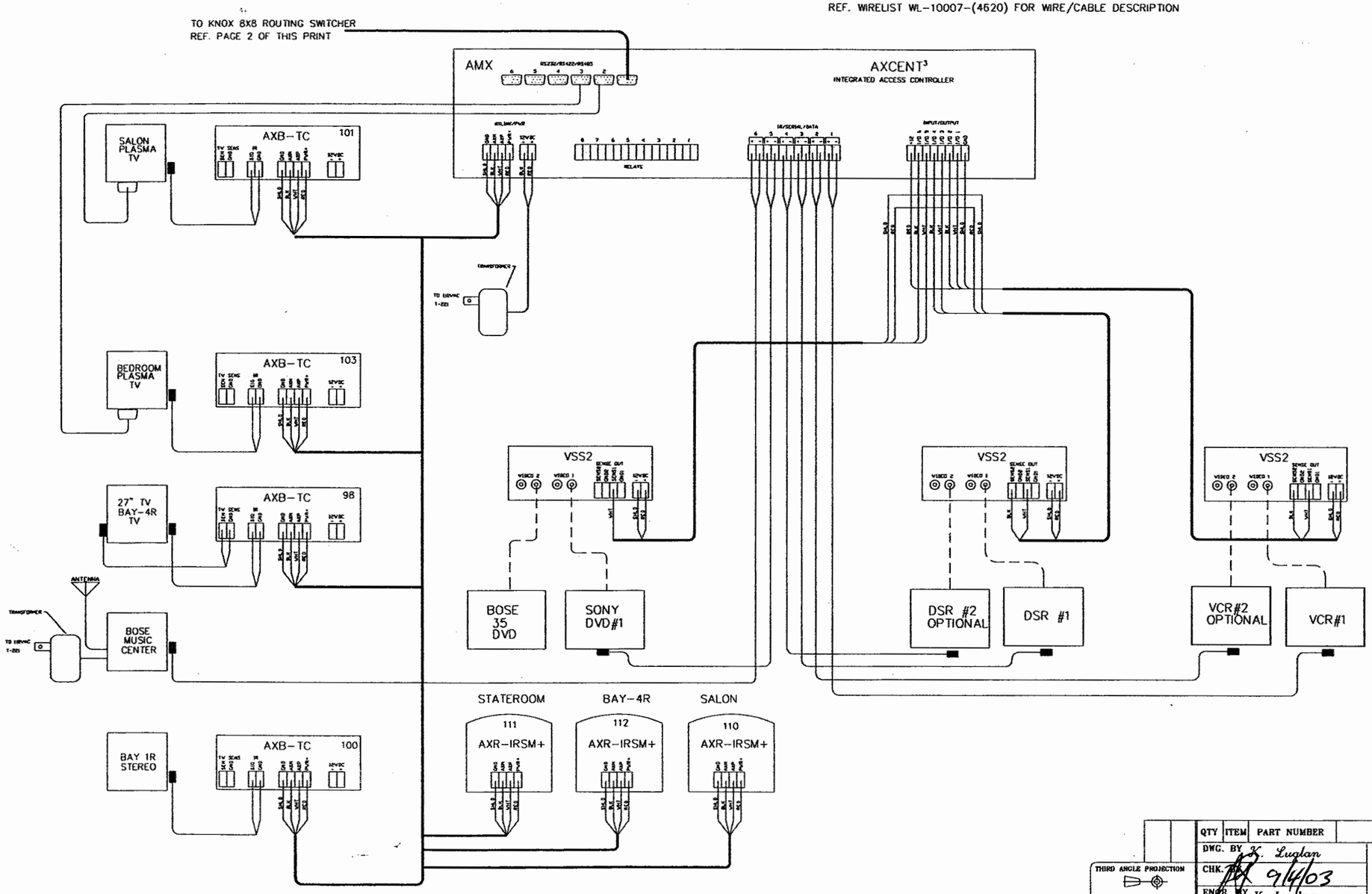

HARDWARE LIST

QTY	ITEM	PART NUMBER	DESCRIPTION	MATERIAL STOCK SIZE

DWG. BY K. Luglan
CHK. 9/4/03
ENGR. BY K. Luglan
CHASIS: H3-45-S2
DATE : 7/30/03

THIRD ANGLE PROJECTION
DO NOT SCALE DRAWING

TOLERANCES UNLESS OTHERWISE SPECIFIED:
ANGLES: ± 1/4°
FRACTIONS: ±1/64
DECIMALS: XX ±.010
DECIMALS: XXX ±.005

PRELIMINARY
THE INFORMATION CONTAINED ON THIS DRAWING IS PRELIMINARY AND IS FOR REVIEW AND EVALUATION PURPOSES ONLY NO PARTS ARE TO BE MANUFACTURED FROM THIS DRAWING

ITEM	MATERIAL FINISH

CUSTOMER NAME: SANIBEL I W/O BUS AIR
CUSTOMER APPROVAL & DATE:

FEATHERLITE
1601 DOLGNER PL
SANFORD FLA 32771
TEL. 1-407-323-1120 FAX 1-407-323-1945

TITLE:
ELECTRICAL LAYOUT
A/V EQUIPMENT

PROPRIETARY NOTICE:
THIS DOCUMENT AND THE INFORMATION DISCLOSED ARE CONFIDENTIAL AND PROPRIETARY TO FEATHERLITE. DISCLOSURE OF SUCH INFORMATION IS EXPRESSLY FORBIDDEN WITHOUT OUR PRIOR WRITTEN PERMISSION

SCALE: N/A
DRAWING NO.: 4620-004AMX
DRAWING FILE # 4620-004AMXA
SHEET: 4 OF 4
REV A

REVISIONS			
REV.	DESCRIPTION	DATE	APPROVAL
–	ORIGINAL RELEASE	8/24/98	RK/JH
F	NEW SHADE BDS. TB2/3. RELAY LAYOUT. PINS. HOUSEKEEPING	1/17/00	HK
G	ROTATE K21D. DELETE CB50	2/1/00	HK
H	FORMAT	7/26/00	HK
I	SHADE BOARD MOUNT CHANGE	6/23/03	MJF

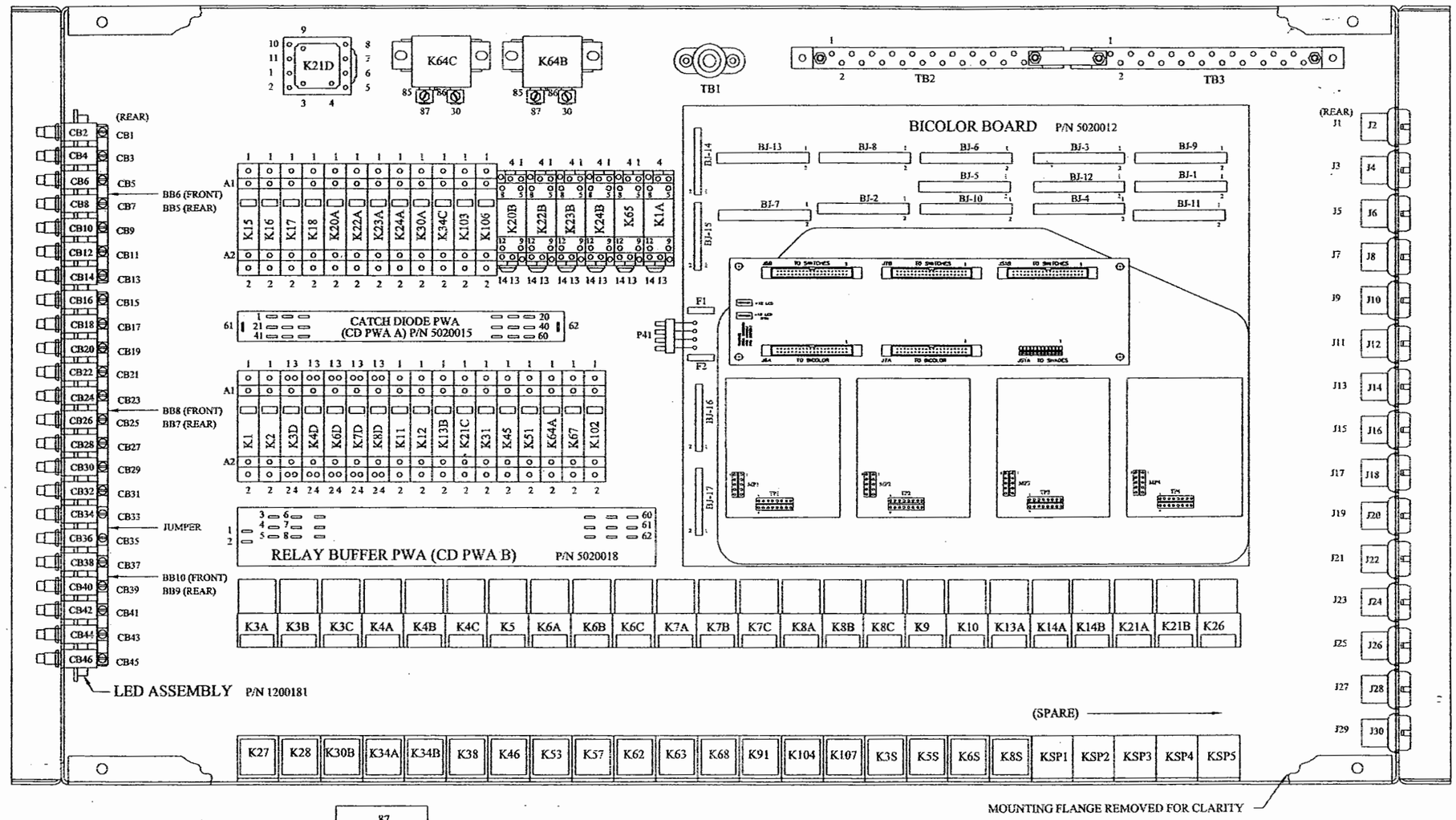

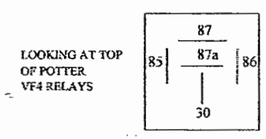

DWG. BY	RK/JH
CHK. BY	
ENGR. BY	
CHASSIS:	
DATE :	8/24/98

FEATHERLITE
1601 DOLGNER, PL
SANFORD FLA 32771
TEL. 1-407-323-1120 FAX 1-407-323-1945

ASSEMBLY
H3 DC RELAY PANEL

SCALE:	DRAWING NO.:	REV.
NONE	5200002	I
	DRAWING FILE # 5200002I.DWG	SHEET: 1 OF 1

CUSTOMER NAME:
CUSTOMER APPROVAL & DATE:

REVISIONS				
ZONE	REV	DESCRIPTION	DATE	APPROVED
	A	ADD SELECTIVE REFERENCE NUMBERS.	12/11/99	
	B	GENERAL DRAWING OVERHALL.	05/01/00	TED
	C	REMOVED PHASE LOSS FROM COACH #7202 ON ALSO #3913, #4085	03/30/01	TED
	D	ADDED CB27 + CHNGD LABELS	6/23/03	MJF

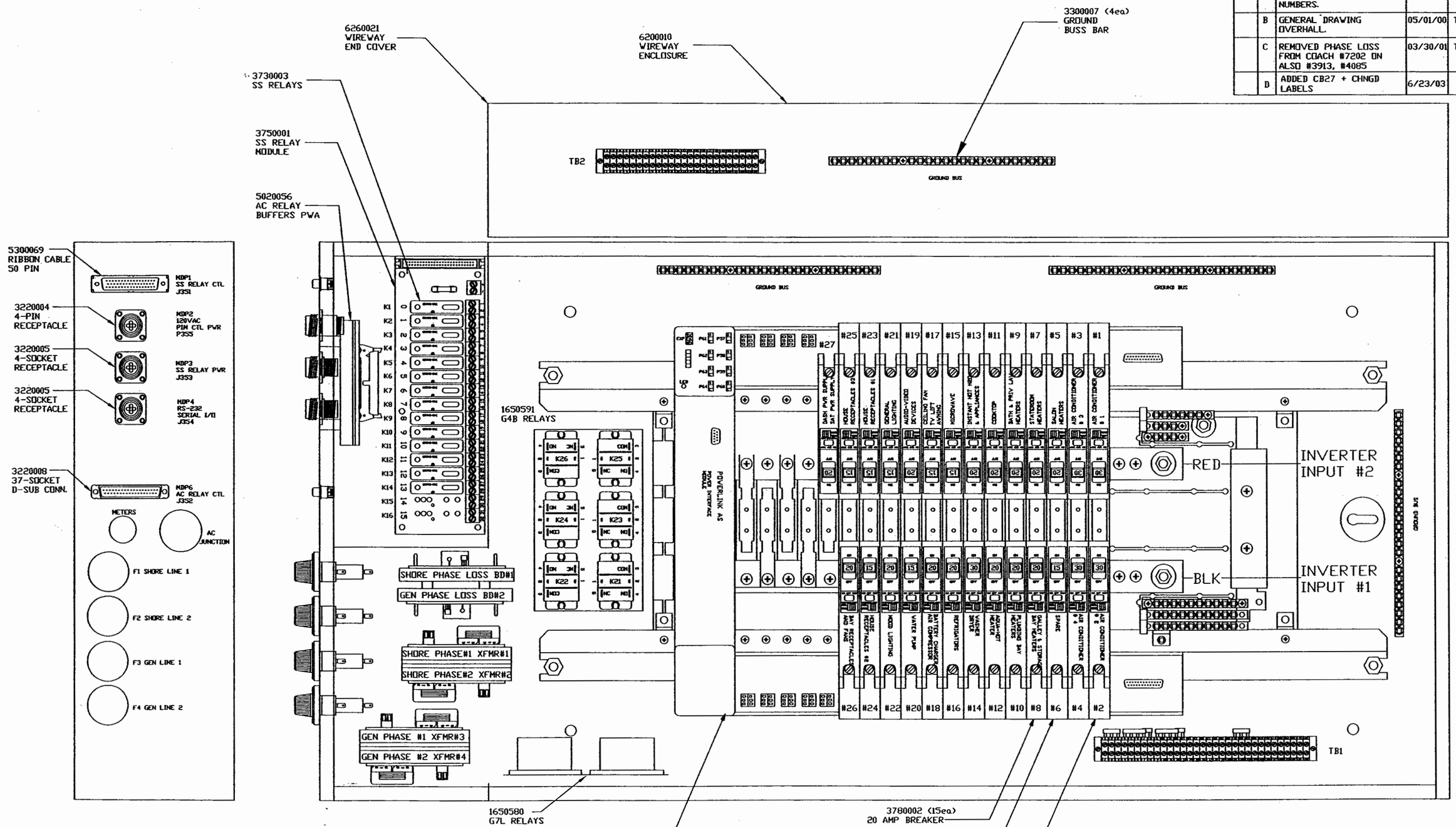

NEXT ASSY:	5200029
WIRE LIST:	
PARTS LIST:	5200017

UNLESS OTHERWISE SPECIFIED:
TOLERANCES:
.XX = ±
.XXX = ±
ANGLES = ±1°
DIMENSIONS ARE IN INCHES.
DO NOT SCALE DRAWING.

SIGNATURES		DATE
DRAWN	RK	03/16/01
CHECKED		
ENGINEER		
ISSUED		
MATERIAL		
FINISH		

Vantare by Featherlite

ASSEMBLY,ELECTRICAL,MECHANICAL, BAY,MDP,H3

DRAWING NO. 5200017 REV. C

SCALE NONE | FILE NO. 5200017C | SHEET 1 OF 1

5200017 C

NOTE — INTERPRET ALL DRAWINGS IN ACCORDANCE WITH ANSI Y14.5-1982

1 THE ASSEMBLY FACEPLATE IS NOT MARKED AS WHAT IS SHOWN.THIS IS JUST FOR ASSEMBLY PURPOSES ONLY! USE THIS VERSION FROM #7202 ON.

REVISIONS			
REV.	DESCRIPTION	DATE	APPROVAL
A	Reformatted,added sheet #2	06/30/00	RK
B	Added switches, for DPMM Use from #7202 on	03/30/01	RK
C	Corrected shore/gen label	05/18/01	RK
D	Phase Switch Change	6/23/03	MJF

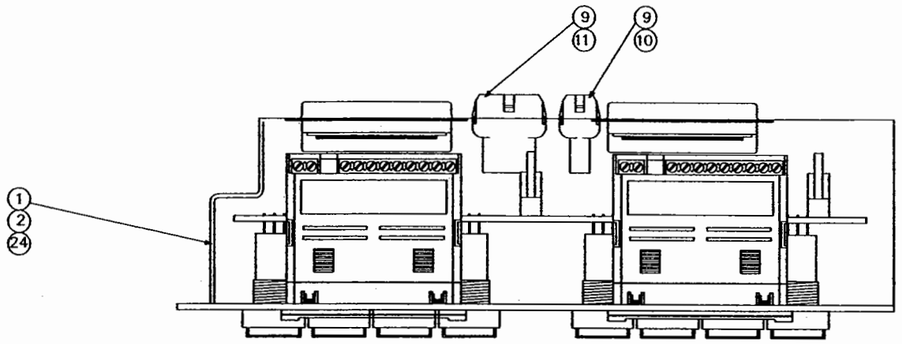

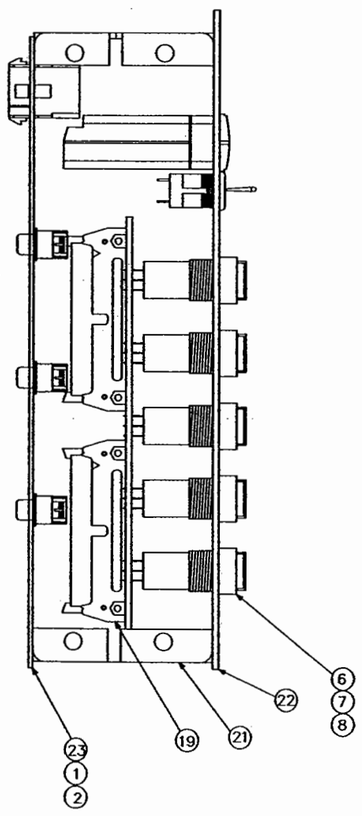

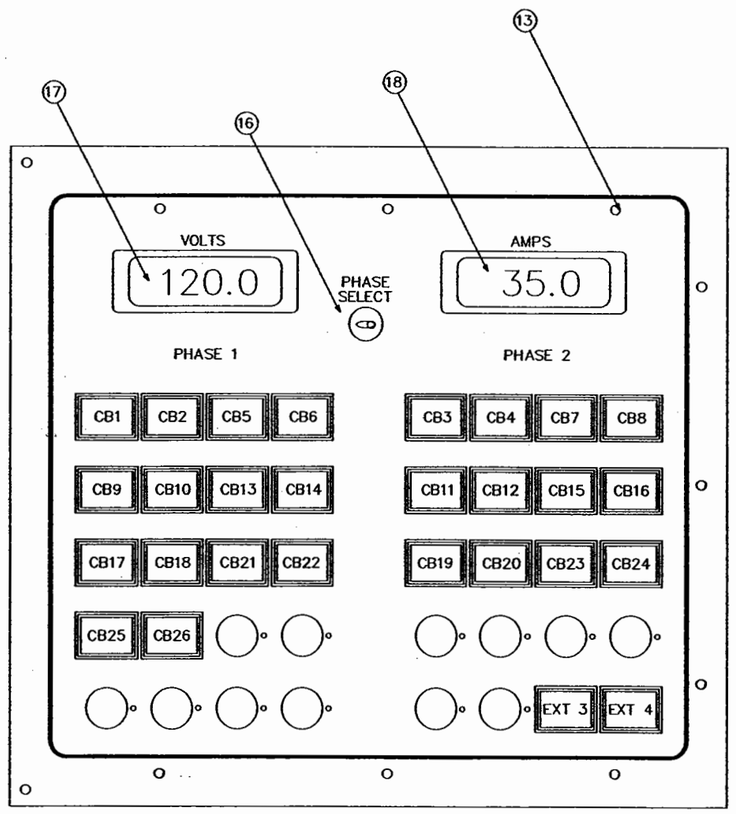

QTY	ITEM	PART NUMBER	DESCRIPTION	MATERIAL STOCK SIZE
	26			
	25			
1EA	24	6260020	Cover,Secondary	
1EA	23	6260019	Cover, Primary	
1EA	22	6230120	Panel	
1EA	21	6200009	6200009	
1EA	20	5260011	Label Kit	
1EA	19	5020049	Remote Switch P.C.board	
1EA	18	3790002	Ammeter	
1EA	17	3790001	Voltmeter	
1EA	16	3500026	Switch,4PDT,On-None-Off	
10EA	15	3410014	Screw,4-40x1/8"	
4EA	14	3410013	Screw, 6-32x1/4" PFH,under cut head,	
9EA	13	3410006	Screw,flathead,6-32x3/8SS,82 deg	
14EA	12	3290003	Plug,Dome,Black plastic	
1EA	11	1672070	Receptacle,9-ckt,female	
1EA	10	1672030	Receptacle,2ckt,female	
10EA	9	1672005	Contact,male 18/24ga	
28EA	8	1650138	Switch, cap	
28EA	7	1650137	Switch Maintained	
28EA	6	1460145	LED	
1FT	5	1380020	Hinge	
1EA	4	1340240	Fuse,Holder	
1EA	3	1340022	Fuse,0.5A,3AG, Fast Acting,250V	
13EA	2	1270671	Screw,6-32 x 1/2" PPH	
13EA	1	1270586	#6 External Tooth Washer	

ITEM	MATERIAL FINISH
5200018	
CUSTOMER NAME:	
CUSTOMER APPROVAL & DATE:	

THIRD ANGLE PROJECTION

DO NOT SCALE DRAWING

TOLERANCES UNLESS OTHERWISE SPECIFIED:
ANGLES: ± 1/4°
FRACTIONS: ±1/64
DECIMALS: XX ±.010
DECIMALS: XXX ±.005

5200029

DWG. BY RK

CHK. BY

ENGR. BY RK

CHASIS:

DATE : 06/30/00

PROPRIETARY NOTICE:

THIS DOCUMENT AND THE INFORMATION DISCLOSED ARE CONFIDENTIAL AND PROPRIETARY TO FEATHERLITE. DISCLOSURE OF SUCH INFORMATION IS EXPRESSLY FORBIDDEN WITHOUT OUR PRIOR WRITTEN PERMISSION

FEATHERLITE
1601 DOLGNER PL
SANFORD FLA 32771
TEL 1-407-323-1120 FAX 1-407-323-1945

TITLE:
ASSEMBLY,UPSTAIRS, BREAKER,SWITCH

SCALE: NONE

DRAWING NO.: 5200018

DRAWING FILE # 5200018D

SHEET: 1 OF 2

REV D

NOTE — INTERPRET ALL DRAWINGS IN ACCORDANCE WITH ANSI Y14.5-1982

REVISIONS			
REV.	DESCRIPTION	DATE	APPROVAL
A			
B			
C			
D			

THIS REPRESENTS A "STANDARD" PANEL AND COMPLEMENT OF SWITCHES.

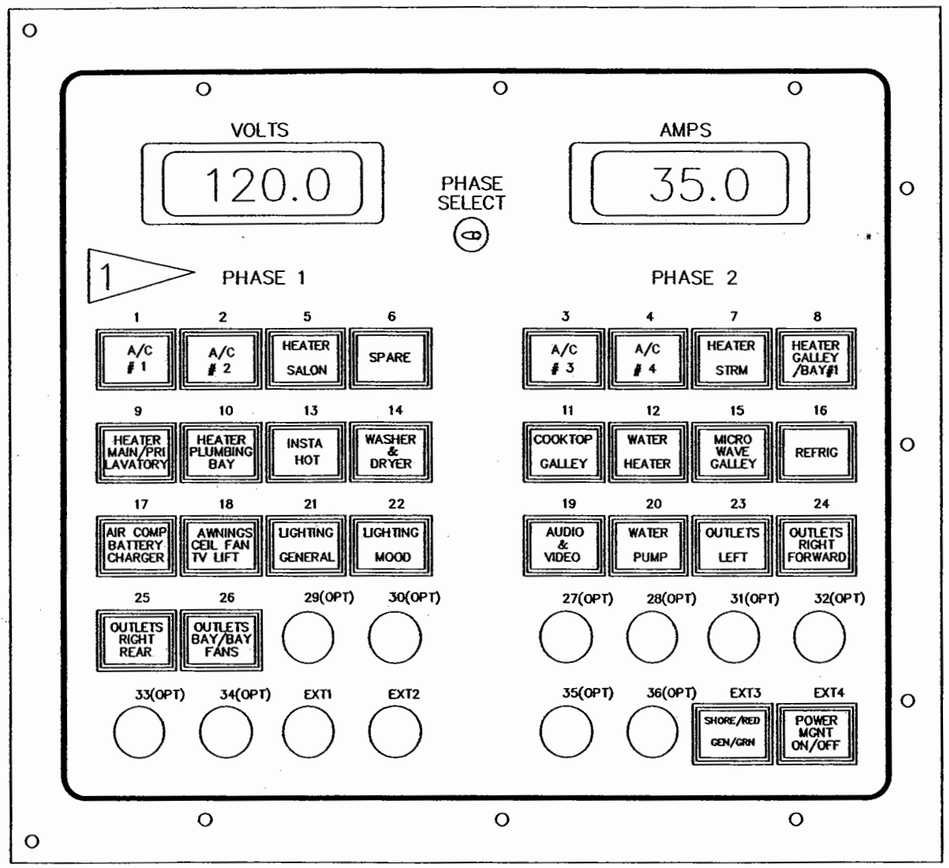

SWITCH POSITION:	LABEL DESCRIPTION:	VANTARE PART #
C.B. 1	FWD CRUISAIR	3570179
C.B. 2	MID-R CRUISAIR	3570370
C.B. 3	MID-L CRUISAIR	3570371
C.B. 4	AFT CRUISAIR	3570369
C.B. 5	HEATER SALON	3570132
C.B. 6	SPARE	3570094
C.B. 7	HEATER STATEROOM	3570133
C.B. 8	HEATER GALLEY & BAY #1	3570134
C.B. 9	HEATER MAIN & PRIV LAVATORY	3570135
C.B. 10	HEATER PLUMBING BAY	3570136
C.B. 11	COOKTOP GALLEY	3570137
C.B. 12	WATER HEATER	3570138
C.B. 13	INSTA HOT	3570081
C.B. 14	WASHER & DRYER	3570140
C.B. 15	MICROWAVE GALLEY	3570141
C.B. 16	REFRIG-ERATORS	3570142
C.B. 17	AIR COMP/ BATTERY CHARGER	3570346
C.B. 18	AWNINGS / CEIL FAN / TV LIFT	3570339 / 343
C.B. 19	AUDIO & VIDEO	3570145
C.B. 20	WATER PUMP	3570146
C.B. 21	LIGHTING GENERAL	3570147
C.B. 22	LIGHTING MOOD	3570148
C.B. 23	OUTLETS LEFT	3570149
C.B. 24	OUTLETS RIGHT FORWARD	3570150
C.B. 25	OUTLETS RIGHT REAR	3570151
C.B. 26	OUTLETS BAY & BAY FANS	3570152
EXT 3	SHORE/RED GEN/GRN	3570192
EXT 4	POWER MGNT ON/OFF	3570193

10 OPTIONAL POSITIONS FOR FUTURE USAGE, AS INTERNALLY SWITCHED DEVICES.
CB28, CB29, CB30, CB31, CB32, CB33, CB34, CB35, CB36.

4 OPTIONAL POSITIONS FOR FUTURE USAGE, AS EXTERNALLY SWITCHED DEVICES.
CB28, CB29, CB30, CB31, CB32, CB33, CB34, CB35, CB36.

ITEM	MATERIAL FINISH
5200018	

CUSTOMER NAME:

CUSTOMER APPROVAL & DATE:

THIRD ANGLE PROJECTION

DO NOT SCALE DRAWING

TOLERANCES UNLESS OTHERWISE SPECIFIED:
ANGLES: ± 1/4°
FRACTIONS: ±1/64
DECIMALS: XX ±.010
DECIMALS: XXX ±.005

5200029

QTY	ITEM	PART NUMBER	DESCRIPTION	MATERIAL STOCK SIZE

DWG. BY RK

CHK. BY

ENGR. BY RK

CHASIS:

DATE : 06/30/00

PROPRIETARY NOTICE:

THIS DOCUMENT AND THE INFORMATION DISCLOSED ARE CONFIDENTIAL AND PROPRIETARY TO FEATHERLITE. DISCLOSURE OF SUCH INFORMATION IS EXPRESSLY FORBIDDEN WITHOUT OUR PRIOR WRITTEN PERMISSION

FEATHERLITE
1601 DOLGNER PL
SANFORD FLA 32771
TEL. 1-407-323-1120 FAX 1-407-323-1945

TITLE:
ASSEMBLY,UPSTAIRS,
BREAKER,SWITCH.

SCALE: NONE

DRAWING NO.: 5200018

DRAWING FILE # 5200018C

SHEET: 2 OF 2

REV C

COACH 4620 DC CIRCUIT BREAKERS (9294620)

BRK	FUNCTION
1	Entry overhead light, Stepwell light
2	Salon left overhead light, Salon right overhead light
3	Dinette overhead light, Galley overhead light
4	Bath overhead light, Stateroom left overhead light, Stateroom right overhead light
5	Private lav overhead light, Shower light
6	Exterior lights
7	Right front accent lights
8	Salon display light
9	Rear accent lights
10	Stateroom DC vanity light
11	Galley work lights
12	SPARE
13	SPARE
14	Left front accent lights
15	Dimmer resistor ctrl
16	SPARE
17	Radar detector
18	Driver's CB
19	TV lift relay box
20	12V accessory jack
21	SPARE
22	SPARE
23	Buddy seat
24	Driver's overhead light, Map light
25	Electric door motor
26	SPARE
27	Electric sofa
28	Shade motors, Shade controllers, VCS relay fuse
29	Bath cabinet lights, Bay 4 fan, Dinette overhead cab lights, Dinette reading lights, Intercom base, Stateroom cabinet lights, Stateroom reading lights, Stateroom rear closet lights
30	Privacy shade, Private lav fan, Shower fan
31	SPARE
32	Satellite antenna sw
33	SPARE
34	BIC switch trigger power, Lights master ctrl, Panel lights
35	SPARE
36	Air slide, Aquahot enable, Fresh water fill valve
37	Bay 5R switch, Color wheel relay, Switch trigger power, Water pump ctrl
38	SPARE
39	Glendinning
40	Aquahot power
41	SPARE
42	SPARE
43	MDP Power
44	Black tank level gauge, Fresh tank level gauge, Glendinning remote, Gray tank level gauge, Toilet valve
45	Left black dump valve, Left gray dump valve
46	Air compressor ctrl

COACH 4620 AC CIRCUIT BREAKERS (9304620)

201	Cruise air-1 compressor
202	Cruise air-2 right compressor
203	Cruise air-3 left compressor
204	Cruise air-4 compressor
205	Salon heater
206	Engine compt.
207	Stateroom heater
208	Storage bay heater
209	Bath heater, Priv lav heater
210	Plumbing bay left heater, Plumbing bay right heater
211	Cooktop
212	Aquahot
213	Kitchen appliances and receptacles
214	Dryer, Washer
215	Microwave oven
216	Bay 4 Cooler, Refrigerator
217	Air compressor, Charger
218	Awning controller, Ceiling fan
219	Audio-visual receptacles
220	Water pump
221	General lighting
222	Rope and fiberoptic lighting
223	Left front receptacles
224	Right front receptacles
225	Rear receptacles
226	Bay receptacles
227	Bay radio power supply, Dash power supply

LABEL FROM	LABEL TO	FROM LOCATION	TO LOCATION	WIRE AWG	Color	Type	Wire #	Notes
CB201	BMDP K25-4	CB201 PIN LOAD	BMDP K25 PIN 4	14	-	SO3C	1001.51	
BMDP K25-3	C/A 1 COMP	BMDP K25 PIN 3	Cruise air-1 compressor PIN TB1-	14	-	SO3C	1001.52	
C/A 1 COMP	C/A 1 EVAP	Cruise air-1 compressor PIN TB1-	Cruise air-1 evaporator	14	-	SO3C	1001.53	
CB202	BMDP K26-4	CB202 PIN LOAD	BMDP K26 PIN 4	14	BLK	SO3C	1002.01	
BMDP K26-3.4	C/A 2 COMP	BMDP K26 PIN 3.4	Cruise air-2 right compressor PIN TB1-	14	blk	SO3C	1002.02	No bus air only
C/A 2 COMP	C/A 2 EVAP	Cruise air-2 right compressor PIN TB1-	Cruise air-2 right evaporator	14	blk	SO3C	1002.03	
CB203	BMDP K19-4	CB203 PIN LOAD	BMDP K19 PIN 4	14	-	SO3C	1003.51	
BMDP K19-3	C/A 3 COMP	BMDP K19 PIN 3	Cruise air-3 left compressor PIN TB1-	14	-	SO3C	1003.52	
C/A 3 COMP	C/A 3 EVAP	Cruise air-3 left compressor PIN TB1-	Cruise air-3 left evaporator	14	-	SO3C	1003.53	
CB204	BMDP K20-4	CB204 PIN LOAD	BMDP K20 PIN 4	10	blk	SO3C	1004.01	
BMDP K20-3	C/A 4 COMP	BMDP K20 PIN 3	Cruise air-4 compressor PIN TB1-	14	blk	SO3C	1004.02	
C/A 4 COMP	C/A 4 EVAP	Cruise air-4 compressor PIN TB1-	Cruise air-4 evaporator	14	blk	SO3C	1004.03	
CB205	SAL HEATER	CB205 PIN LOAD	Sal heater	12	-	2C&G	1005.01	
CB206	ENG COMP REC	CB206 PIN LOAD	Engine compt. receptacle	12	-	2C&G	1006.01	
CB207	STRM HEATER	CB207 PIN LOAD	Strm heater	12	-	2C&G	1007.01	
CB208	STORG BAY HT	CB208 PIN LOAD	Storage bay heater	12	-	2C&G	1008.01	
CB209	BATH HEATER	CB209 PIN LOAD	Bath heater	12	-	2C&G	1009.01	
BATH HEATER	PRIV LAV HT	Bath heater	Priv lav heater	12	-	2C&G	1009.02	
CB210	PL BAY L TST	CB210 PIN LOAD	Plumbing bay left tstat PIN LINE	12	-	2C&G	1010.01	
PL BAY L TST	PL BAY L HTR	Plumbing bay left tstat PIN LOAD	Plumbing bay left heater	12	-	2C&G	1010.02	
CB210	PL BAY R TST	CB210 PIN LOAD	Plumbing bay right tstat PIN LINE	12	-	2C&G	1010.03	
PL BAY R TST	PL BAY R HTR	Plumbing bay right tstat PIN LOAD	Plumbing bay right heater	12	-	2C&G	1010.04	
CB211	COOKTOP JBOX	CB211 PIN LOAD	Cooktop J-box	12	-	2C&G	1011.01	110VAC
CB212	AQUAHOT HTR	CB212 PIN LOAD	Aquahot PIN AC INPUT	12	-	2C&G	1012.01	
CB213	INSTAHOT	CB213 PIN LOAD	Insta-hot receptacle	12	-	2C&G	1013.01	
CB214	WASHER	CB214 PIN LOAD	Washer receptacle	12	-	2C&G	1014.01	
CB214	DRYER	CB214 PIN LOAD	Dryer receptacle	12	-	2C&G	1014.02	
CB215	MICROWAVE	CB215 PIN LOAD	Microwave oven receptacle	14	-	2C&G	1015.01	
CB216	REFRIGERATOR	CB216 PIN LOAD	Refrigerator receptacle	12	-	2C&G	1016.01	
CB216	BAY 4 COOLER	CB216 PIN LOAD	Bay 4 Cooler	12	-	2C&G	1016.02	
BMDP K21-3	AIR COMPRESS	BMDP K21 PIN 3	Air compressor J-box	14	-	2C&G	1017.01	
BMDP K24-3	BATT CHARGER	BMDP K24 PIN 3	Charger receptacle	14	-	2C&G	1017.02	
SS RELAY J1	CEILING FAN	BMDP relay board J1 PIN 4	Ceiling fan	14	-	2C&G	1018.05	
BMDP TB1-21	TV LIFT JBOX	BMDP TB1 PIN 21	TV lift relay box	12	-	2C&G	1018.01	
BMDP TB1-22	AWNING CTRLR	BMDP TB1 PIN 22	Awning controller	12	-	2C&G	1018.02	
AWNING CTRLR	FRONT AWNING	Awning controller	Awning (front)	12	-	4C	1018.03	
AWNING CTRLR	REAR AWNING	Awning controller	Awning (rear)	12	-	2C&G	1018.04	
BMDP TB1-19	BAY AV RECPT	BMDP TB1 PIN 19	Bay AV receptacle	12	-	2C&G	1019.01	
BMDP TB1-16	DRV CAB AV	BMDP TB1 PIN 16	Driver's cabinet AV receptacle	12	-	2C&G	1019.02	
BMDP TB1-17	FRONT SBWOOF	BMDP TB1 PIN 17	Front subwoofer receptacle	12	-	2C&G	1019.03	Under sofa
BMDP TB1-18	FWD OHEAD AV	BMDP TB1 PIN 18	Front overhead AV receptacle	12	-	2C&G	1019.04	In O/H helm
BMDP TB1-17	REAR SUBWOOF	BMDP TB1 PIN 17	Rear subwoofer receptacle	12	-	2C&G	1019.05	Under Strm bed
BMDP TB1-18	REAR AV CAB	BMDP TB1 PIN 18	Rear entertain cab AV recept	12	-	2C&G	1019.06	Strm cabinet
REAR AV CAB	VCS RECEPTCL	Rear entertain cab AV recept	VCS receptacle	12	-	2C&G	1019.09	Strm cabinet
BMDP TB1-14	ISO XFMR-A	BMDP TB1 PIN 14	Isolation transformer A PIN PRIMARY	12	-	2C&G	1019.10	If plasma TV
ISO XFMR-A	TV LIFT JBOX	Isolation transformer A PIN SECONDY	TV lift relay box	12	-	2C&G	1019.11	If overhead plasma TV lift
TV LIFT JBOX	OHD PLSMA TV	TV lift relay box	Overhead plasma TV receptacle	12	-	2C&G	1019.12	If overhead plasma TV lift
BMDP TB1-15	ISO XFMR-B	BMDP TB1 PIN 15	Isolation transformer B PIN PRIMARY	12	-	2C&G	1019.13	if Stateroom plasma
ISO XFMR-B	STRM PLSMA	Isolation transformer B PIN SECONDY	Strm plasma TV receptacle	12	-	2C&G	1019.14	if Stateroom plasma
BMDP K18-1	WATER PUMP	BMDP K18 PIN 1	Water pump	14	-	2C&G	1020.01	
SS RELAY J1	PRIV LAV VAN	BMDP relay board J1 PIN 12	Priv lav AC vanity light	14	-	2C&G	1021.01	

LABEL FROM	LABEL TO	FROM LOCATION	TO LOCATION	WIRE AWG	Color	Type	Wire #	Notes
SS RELAY J1	STRM VANITY	BMDP relay board J1 PIN 16	Strm AC vanity light	14	-	2C&G	1021.02	
SS RELAY J1	CHAND DIMMER	BMDP relay board J1 PIN 20	Chandelier dimmer PIN LINE	14	-	2C&G	1021.03	
CHAND DIMMER	CHANDELIER	Chandelier dimmer PIN LOAD	Chandelier	14	-	2C&G	1021.04	
SS RELAY J1	SAL SO LO JB	BMDP relay board J1 PIN 18	Sal left slideout lower J-box PIN LOAD	14	-	2C&G	1021.07	Salon sconce light left
SAL SO LO JB	SAL SO UP JB	Sal left slideout lower J-box PIN LINE	Sal left slideout upper J-box PIN LOAD	14	-	2C&G	1021.08	Salon sconce light left
SAL SO UP JB	SAL SCONCE L	Sal left slideout upper J-box PIN LINE	Salon sconce light (SLS) PIN LOAD	14	-	2C&G	1021.09	Salon sconce light left
SS RELAY J1	SAL SCONCE R	BMDP relay board J1 PIN 18	Salon sconce light PIN LOAD	14	-	2C&G	1021.12	Salon sconce light right
SS RELAY J1	FIBEROPTICS	BMDP relay board J1 PIN 6	Fiberoptics receptacle	14	-	2C&G	1022.01	
SS RELAY J1	SAL CARP FO	BMDP relay board J1 PIN 8	Sal carpet f/op receptacle	14	-	2C&G	1022.02	NOT APPLICABLE
SS RELAY J1	BATH NIGHT	BMDP relay board J1 PIN 24	Bathroom night light	14	-	2C&G	1022.04	
BMDP TB1-21	HR1 RECP A	BMDP TB1 PIN 21	HR1 receptacle A	14	-	2C&G	1023.01	Driver's cabinet
HR1 RECP A	HR1 RECP B	HR1 receptacle A	HR1 receptacle B	14	-	2C&G	1023.02	Pizza Bay for Cell phone stand
BMDP TB1-22	SAL SO LO JB	BMDP TB1 PIN 22	Sal left slideout lower J-box PIN black	14	-	2C&G	1023.03	Slideout only - receptacles
SAL SO UP JB	HR1 RECP C	Sal left slideout upper J-box PIN black	HR1 receptacle C	14	-	2C&G	1023.04	Slideout only - receptacles
BMDP TB1-23	HR1 RECP D	BMDP TB1 PIN 23	HR1 receptacle D	14	-	2C&G	1023.06	Private Lavatory
CB224	HR2 RECP A	CB224 PIN LOAD	HR2 receptacle A	14	-	2C&G	1024.01	Sofa toekick pass side
HR2 RECP A	HR2 RECP B	HR2 receptacle A	HR2 receptacle B	14	-	2C&G	1024.02	Dinette table outlet
BMDP TB1-26	HR3 RECP A	BMDP TB1 PIN 26	HR3 receptacle A	14	-	2C&G	1025.01	Bottom side of upr cabinet
HR3 RECP A	HR3 RECP B	HR3 receptacle A	HR3 receptacle B	14	-	2C&G	1025.02	Inside medice cabinet
HR3 RECP B	HR3 RECP C	HR3 receptacle B	HR3 receptacle C	14	-	2C&G	1025.03	Vanity cabinet toekick
BMDP TB1-27	STRM J-BOX	BMDP TB1 PIN 27	Strm left J-box	14	-	2C&G	1025.04	Slideout only
STRM J-BOX	HR3 RECP D	Strm left J-box	HR3 receptacle D	14	-	2C&G	1025.05	Phone & Intercom
HR3 RECP D	HR3 RECP E	HR3 receptacle D	HR3 receptacle E	14	-	2C&G	1025.06	On face of fwd night stand
HR3 RECP E	HR3 RECP F	HR3 receptacle E	HR3 receptacle F	14	-	2C&G	1025.07	On face of aft night stand
CB226	ENT BAY RECP	CB226 PIN LOAD	Entertainment bay receptacle PIN LINE	12	-	2C&G	1026.01	GFI
WW TB2-5.8	ENT BAY RECP	Wireway TB2 PIN 5.8	Entertainment bay receptacle PIN LOAD	12	-	2C&G	1026.02	
WW TB2-6.9	BAY 2L RECP	Wireway TB2 PIN 6.9	Bay 2 left receptacle	12	-	2C&G	1026.03	
BAY 2L RECP	STORG BAY L	Bay 2 left receptacle	Storage bay left receptacle	12	-	2C&G	1026.04	
STORG BAY L	STORG BAY R	Storage bay left receptacle	Storage bay right receptacle	12	-	2C&G	1026.05	
WW TB2-7.10	PLUM BAY L	Wireway TB2 PIN 7.10	Plumbing bay left receptacle	12	-	2C&G	1026.06	
WW TB2-7.10	PLUM BAY R	Wireway TB2 PIN 7.10	Plumbing bay right receptacle	12	-	2C&G	1026.07	
BMDP TB1-20	DASH PWR SUP	BMDP TB1 PIN 20	Dash power supply	14	-	2C&G	1027.01	Dash power supply
BMDP TB1-20	BAY RADIO SU	BMDP TB1 PIN 20	Bay radio power supply	14	-	2C&G	1027.02	Bay radio & Sat. power sup
BAY MDP	SPARE 2	Bay MDP PIN TBD	Spare 2	12	-	2C&G	1050.01	Spare
BAY MDP	SPARE 3	Bay MDP PIN TBD	Spare 3	12	-	2C&G	1050.02	Spare
BAY MDP	SPARE 4	Bay MDP PIN TBD	Spare 4	12	-	2C&G	1050.03	Spare
BMDP GND A	GND BUS BAR	MDP ground bar A	Ground bus bar (AC) PIN 10	8	grn	1C	1900.01	
BMDP GND A	AC J/B-GROUN	MDP ground bar A	AC power junction box PIN GROUND	8	grn	1C	1900.02	
BMDP GND A	BMDP GND B	MDP ground bar A	MDP ground bar B	10	grn	1C	1900.03	
BMDP NEUT A	BMDP NEUT B	MDP neutral bar A	MDP neutral bar B	10	wht	1C	1900.04	
SHORE CABLE	SHR BRKR JB	Shore power cable PIN LINE 1	Shore power breaker J-box PIN LINE A	6	blk	SO4C	1902.01	Shore power cable
SHORE CABLE	SHR BRKR JB	Shore power cable PIN LINE 2	Shore power breaker J-box PIN LINE B	6	red	SO4C	1902.02	Shore power cable
SHORE CABLE	SHR BRKR JB	Shore power cable PIN NEUTRAL	Shore power breaker J-box PIN LINE C	6	wht	SO4C	1902.03	Shore power cable
SHORE CABLE	SHR BRKR JB	Shore power cable PIN GROUND	Shore power breaker J-box PIN GROUND	6	grn	SO4C	1902.04	Shore power cable
SHR BRKR JB	AC J/B-TB1-1	Shore power breaker J-box PIN LOAD A	AC power junction box PIN TB1-1	6	blk	SO4C	1903.01	Cable 1
SHR BRKR JB	AC J/B-TB1-2	Shore power breaker J-box PIN LOAD B	AC power junction box PIN TB1-2	6	red	SO4C	1903.02	Cable 1
SHR BRKR JB	AC J/B-TB1-3	Shore power breaker J-box PIN NEUTRAL	AC power junction box PIN TB1-3	6	wht	SO4C	1903.03	Cable 1
SHR BRKR JB	AC J/B-GROUN	Shore power breaker J-box PIN GROUND	AC power junction box PIN GROUND	6	grn	SO4C	1903.04	Cable 1
GEN BRKR JB	AC J/B-TB2-1	Generator output breaker J-box PIN LOAD A	AC power junction box PIN TB2-1	6	blk	1C	1904.01	Conduit 4
GEN BRKR JB	AC J/B-TB2-2	Generator output breaker J-box PIN LOAD B	AC power junction box PIN TB2-2	6	red	1C	1904.02	Conduit 4
GEN BRKR JB	AC J/B-TB2-3	Generator output breaker J-box PIN NEUTRAL	AC power junction box PIN TB2-3	4	wht	1C	1904.03	Conduit 4
GEN BRKR JB	AC J/B-GROUN	Generator output breaker J-box PIN GROUND	AC power junction box PIN GROUND	8	grn	1C	1904.04	Conduit 4
INV 1 BP SW	AC J/B-TB1-1	Inverter 1 bypass switch PIN 1	AC power junction box PIN TB1-1	6	blk	1C	1906.01	Shore line 1 via curr xfmr 1
INV 2 BP SW	AC J/B-TB1-2	Inverter 2 bypass switch PIN 1	AC power junction box PIN TB1-2	6	red	1C	1906.02	Shore line 2 via curr xfmr 2
INV 1 BP SW	AC J/B-TB2-1	Inverter 1 bypass switch PIN 5	AC power junction box PIN TB2-1	6	blk	1C	1906.03	Gener line 1 via curr xfmr 1
INV 2 BP SW	AC J/B-TB2-2	Inverter 2 bypass switch PIN 5	AC power junction box PIN TB2-2	6	red	1C	1906.04	Gener line 2 via curr xfmr 2
AC J/B-TB1-1	INVERTER 1	AC power junction box PIN TB1-1	Inverter 1 PIN AC IN 1	6	blk	SO4C	1908.01	Cable 2

AC WIRING WIRE LIST
Coach 4620

LABEL FROM	LABEL TO	FROM LOCATION	TO LOCATION	WIRE AWG	WIRE Color	WIRE Type	Wire #	Notes
AC J/B-TB2-1	INVERTER 1	AC power junction box PIN TB2-1	Inverter 1 PIN AC IN 2	6	red	SO4C	1908.02	Cable 2
AC J/B-TB1-3	INVERTER 1	AC power junction box PIN TB1-3	Inverter 1 PIN NEU IN 1	6	wht	SO4C	1908.03	Cable 2
AC J/B-TB2-3	INVERTER 1	AC power junction box PIN TB2-3	Inverter 1 PIN NEU IN 2	6	grn	SO4C	1908.04	Cable 2-mark WHITE for neutral
AC J/B-TB1-2	INVERTER 2	AC power junction box PIN TB1-2	Inverter 2 PIN AC IN 1	6	blk	SO4C	1909.01	Cable 3
AC J/B-TB2-2	INVERTER 2	AC power junction box PIN TB2-2	Inverter 2 PIN AC IN 2	6	red	SO4C	1909.02	Cable 3
AC J/B-TB1-3	INVERTER 2	AC power junction box PIN TB1-3	Inverter 2 PIN NEU IN 1	6	wht	SO4C	1909.03	Cable 3
AC J/B-TB2-3	INVERTER 2	AC power junction box PIN TB2-3	Inverter 2 PIN NEU IN 2	6	grn	SO4C	1909.04	Cable 3-mark WHITE for neutral
INVERTER 1	INV 1 OUT BK	Inverter 1 PIN AC OUT	Inverter 1 output breaker PIN LINE	6	blk	1C	1912.01	Conduit 1
INVERTER 1	BMDP NEUT A	Inverter 1 PIN NEUT OUT	MDP neutral bar A	6	wht	1C	1912.02	Conduit 1
INVERTER 1	BMDP GND A	Inverter 1 PIN GROUND	MDP ground bar A	6	grn	1C	1912.03	Conduit 1
INVERTER 2	INV 2 OUT BK	Inverter 2 PIN AC OUT	Inverter 2 output breaker PIN LINE	6	red	1C	1913.01	Conduit 2
INVERTER 2	BMDP NEUT B	Inverter 2 PIN NEUT OUT	MDP neutral bar B	6	wht	1C	1913.02	Conduit 2
INVERTER 2	BMDP GND B	Inverter 2 PIN GROUND	MDP ground bar B	6	grn	1C	1913.03	Conduit 2
INV 1 OUT BK	INV 1 BP SW	Inverter 1 output breaker PIN LOAD	Inverter 1 bypass switch PIN 3	6	blk	1C	1914.01	
INV 2 OUT BK	INV 2 BP SW	Inverter 2 output breaker PIN LOAD	Inverter 2 bypass switch PIN 3	6	red	1C	1914.02	
INV 1 BP SW	BAY MDP	Inverter 1 bypass switch PIN 2	Bay MDP PIN LINE 1	6	blk	1C	1915.01	
INV 2 BP SW	BAY MDP	Inverter 2 bypass switch PIN 2	Bay MDP PIN LINE 2	6	red	1C	1915.02	
WW TB2-1	CUR XFMR A	Wireway TB2 PIN 1	Current transformer A PIN BLACK	18	blk	6C	1918.01	
WW TB2-2	CUR XFMR A	Wireway TB2 PIN 2	Current transformer A PIN WHITE	18	wht	6C	1918.02	
WW TB2-3	CUR XFMR B	Wireway TB2 PIN 3	Current transformer B PIN BLACK	18	red	6C	1918.03	
WW TB2-4	CUR XFMR B	Wireway TB2 PIN 4	Current transformer B PIN WHITE	18	brn	6C	1918.04	
AC J/B-TB2-1	240V XFR SW	AC power junction box PIN TB2-1	Transfer switch PIN GEN IN 1	6	blk	1C	1920.01	Conduit 5
AC J/B-TB2-2	240V XFR SW	AC power junction box PIN TB2-2	Transfer switch PIN GEN IN 2	6	red	1C	1920.02	Conduit 5
AC J/B-TB1-1	240V XFR SW	AC power junction box PIN TB1-1	Transfer switch PIN SHR IN 1	6	blk	1C	1920.03	Conduit 5
AC J/B-TB1-2	240V XFR SW	AC power junction box PIN TB1-2	Transfer switch PIN SHR IN 2	6	red	1C	1920.04	Conduit 5
AC J/B-GROUN	240V XFR SW	AC power junction box PIN GROUND	Transfer switch PIN GROUND	8	grn	1C	1920.05	Conduit 5
P356-	P336-	P356	P336	-	-	9C	1000.01	AC meter signals
P349-	P355-	P349	P355	-	-	4C	1000.02	120VAC uninterrupted power
SAL SO LO JB	SAL SO UP JB	Sal left slideout lower J-box	Sal left slideout upper J-box	12	COIL	7C	1000.03	Slideout only - coiled cord A
SAL SO LO JB	SAL LUP RP J	Sal left rope lgts lower J-box PIN all	Sal left rope lgts upper J-box PIN all	12	COIL	7C	1120.02	Two zone only, slideout
BMDP K22-3	F ROPE DIMMR	BMDP K22 PIN 3	Forward rope lights dimmer PIN LINE	14	-	2C&G	1100.01	Two zone only
WW TB2-11.14	F ROPE DIMMR	Wireway TB2 (ROPE) PIN 11.14	Forward rope lights dimmer PIN LOAD	14	-	2C&G	1100.02	Two zone only
BMDP K23-3	REAR DIMMER	BMDP K23 PIN 3	Rear rope lights dimmer PIN LINE	14	-	2C&G	1100.03	Two zone only
WW TB2-12.15	TOP STEP ROP	Wireway TB2 (ROPE) PIN 12.15	Top step rope lights	16	-	2CNG	1110.01	Two zone only
WW TB2-12.15	DRV CAB CNTR	Wireway TB2 (ROPE) PIN 12.15	Driver's cab counter rope lgts	16	-	2CNG	1115.01	Two zone only
WW TB2-13.16	SAL SO LO JB	Wireway TB2 (ROPE) PIN 13.16	Sal left rope lgts lower J-box PIN black	14	-	2C&G	1120.01	Two zone only, slideout
WW TB2-13.16	GAL L RP JB	Wireway TB2 (ROPE) PIN 13.16	Galley left rope lights J-box	14	-	2C&G	1125.01	Two zone only, slideout
F ROPE DIMMR	GAL R RP JB	Forward rope lights dimmer PIN LOAD	Galley right rope lights J-box	14	-	2C&G	1130.01	Two zone only
REAR DIMMER	BATH R RP JB	Rear rope lights dimmer PIN LOAD	Bath right rope lights J-box	14	-	2C&G	1135.01	Two zone only
BATH R RP JB	BATH L RP JB	Bath right rope lights J-box	Bath left rope lights J-box	14	-	2C&G	1140.01	Two zone only
BATH L RP JB	REAR RP JBOX	Bath left rope lights J-box	Strm left rope lights J-box	14	-	2C&G	1145.01	Two zone only, slideout

WIRE LABEL LINE 1	LINE 2	FROM LOCATION	Branch	Run	Offset	Term	TO LOCATION	Branch	Run	Offset	Term	WIRE AWG	Color	Type	Length	Wire #	Notes
INV 1 TEMP	BATTERY 4	Inverter 1 temp sensor	AFT	12.0	10.0	factory	Battery 4 (CT harn) PIN CASE	AFT	26.0	14.0	none	24	gry	4C	38.0	34.01	Battery temp sensor
INV 2 TEMP	BATTERY 8	Inverter 2 temp sensor	AFT	8.0	10.0	factory	Battery 8 (CT harn) PIN CASE	AFT	21.0	14.0	none	24	gry	4C	37.0	34.02	Battery temp sensor
12V BUS BAR	DCR 12V BRKR	12V bus bar (CT harn) PIN 2	AFT	20.0	9.0	3/8 rlug	DC relay 12V breaker PIN LINE	AFT	17.0	7.0	1/4 rlug	2	red	1C	19.0	40.01	
DCR 12V BRKR	DCR TB1	DC relay 12V breaker PIN LOAD	AFT	17.0	7.0	1/4 rlug	DCR TB1 (CT harn)	FWD	0.0	6.0	3/8 rlug	2	red	1C	30.0	40.02	
GND BUS BAR	DCR TB2	Ground bus bar (CT harn) PIN 4	AFT	20.0	9.0	3/8 rlug	DCR TB2 (CT harn)	FWD	0.0	6.0	3/8 rlug	2	blk	1C	35.0	40.03	
24V BUS BAR	CB301	24V bus bar (CT harn) PIN 4	AFT	20.0	9.0	1/2 rlug	CB301 PIN LINE	AFT	20.0	5.0	#8 lug	10	red	1C	7.0	43.01	Short jumper
P21-15	CB301	P21 PIN 15	MAIN	0.0	0.0	F crimp	CB301 PIN LOAD	AFT	20.0	5.0	#8 lug	10	red	1C	25.0	43.02	DC relay 24V supply
P22-3	ENG BOOST	P22 PIN 3	MAIN	0.0	0.0	F crimp	Engine boost relay (CT) PIN coil-	AFT	31.0	10.0	#10 lug	16	gry	1C	41.0	51.05	
P22-4	GEN BOOST	P22 PIN 4	MAIN	0.0	0.0	F crimp	Gen boost relay (CT) PIN coil-	AFT	31.0	6.0	#10 rlug	16	gry	1C	37.0	53.05	
12V BUS BAR	V MONITOR	12V bus bar (CT harn) PIN 3	AFT	20.0	9.0	3/8 rlug	Voltage monitor (CT) PIN 12V	AFT	31.0	6.0	#8 lug	16	yel	1C	26.0	70.01	
24V BUS BAR	V MONITOR	24V bus bar (CT harn) PIN 1	AFT	20.0	9.0	3/8 rlug	Voltage monitor (CT) PIN 24V	AFT	31.0	6.0	#8 lug	16	red	1C	26.0	70.02	
GND BUS BAR	V MONITOR	Ground bus bar (CT harn) PIN 9	AFT	20.0	9.0	3/8 rlug	Voltage monitor (CT) PIN GND	AFT	31.0	6.0	#8 lug	16	blk	1C	26.0	70.03	
V MONITOR	V MON DISP	Voltage monitor (CT) PIN IGN	AFT	31.0	6.0	#8 lug	Voltage monitor display (CT) PIN IGN	FWD	2.0	18.0	splice	18	red	6C	57.0	70.04	
V MONITOR	V MON DISP	Voltage monitor (CT) PIN LO	AFT	31.0	6.0	#8 lug	Voltage monitor display (CT) PIN LO	FWD	2.0	18.0	splice	18	blu	6C	57.0	70.05	
V MONITOR	V MON DISP	Voltage monitor (CT) PIN HI	AFT	31.0	6.0	#8 lug	Voltage monitor display (CT) PIN HI	FWD	2.0	18.0	splice	18	grn	6C	57.0	70.06	
V MONITOR	V MON DISP	Voltage monitor (CT) PIN BAL	AFT	31.0	6.0	#8 lug	Voltage monitor display (CT) PIN BAL	FWD	2.0	18.0	splice	18	wht	6C	57.0	70.07	
P22-5	P601-8	P22 PIN 5	MAIN	0.0	0.0	F crimp	P601 PIN 8	AFT	8.0	9.0	F crimp	16	blu	1C	17.0	75.01	Gen start
P22-6	P601-1	P22 PIN 6	MAIN	0.0	0.0	F crimp	P601 PIN 1	AFT	8.0	9.0	F crimp	16	blu	1C	17.0	75.02	Gen 12V source to DCR
P22-7	P601-4	P22 PIN 7	MAIN	0.0	0.0	F crimp	P601 PIN 4	AFT	8.0	9.0	F crimp	16	blu	1C	17.0	75.03	Gen stop
P22-8	P601-6	P22 PIN 8	MAIN	0.0	0.0	F crimp	P601 PIN 6	AFT	8.0	9.0	F crimp	16	blu	1C	17.0	75.04	Gen preheat
P22-9	P601-7	P22 PIN 9	MAIN	0.0	0.0	F crimp	P601 PIN 7	AFT	8.0	9.0	F crimp2	16	blu	1C	17.0	75.05	Gen run signal
P601-2	J51-1	P601 PIN 2	AFT	8.0	9.0	F crimp	J51 PIN 1	AFT	12.0	5.0	F crimp	16	blu	1C	18.0	75.06	Gen oil temp gauge
P601-3	J51-2	P601 PIN 3	AFT	8.0	9.0	F crimp	J51 PIN 2	AFT	12.0	5.0	F crimp	16	blu	1C	18.0	75.07	gen water temp gauge
P601-7	J51-3	P601 PIN 7	AFT	8.0	9.0	F crimp2	J51 PIN 3	AFT	12.0	5.0	F crimp	16	blu	1C	18.0	75.08	Gen run to ctrl panel
P601-9	J51-4	P601 PIN 9	AFT	8.0	9.0	F crimp	J51 PIN 4	AFT	12.0	5.0	F crimp	16	blk	1C	18.0	75.09	Gen ground
P15-7	PREV 12V IGN	P15 PIN 7	MAIN	0.0	0.0	F crimp	Prevost term block 12V ign FEB	LOWER	2.5	3.0	1/4 lug	16	red	1C	5.5	80.01	
P26-1	J55-1	P26 PIN 1	MAIN	0.0	0.0	F crimp	J55 PIN 1	AFT	31.0	1.0	M crimp	16	grn	2C	32.0	100.01	Single window 1
P26-2	J55-2	P26 PIN 2	MAIN	0.0	0.0	F crimp	J55 PIN 2	AFT	31.0	1.0	M crimp	16	yel	2C	32.0	100.02	Single window 1
P55-1	SHADE MTR 1	P55 PIN 1	MAIN	0.0	0.0	F crimp	Shade motor 1 PIN +	UPPER	6.0	2.0	splice	16	grn	2C	8.0	100.03	Single window 1
P55-2	SHADE MTR 1	P55 PIN 2	MAIN	0.0	0.0	F crimp	Shade motor 1 PIN -	UPPER	6.0	2.0	splice	16	yel	2C	8.0	100.04	Single window 1
P28-1	SHADE MTR 2A	P28 (SLS harn) PIN 1	MAIN	0.0	0.0	F crimp	Shade motor 2A (SLS) PIN +	UAFT	0.0	2.0	splice2	16	grn	2C	2.0	104.01	Double window 2 slideout
P28-2	SHADE MTR 2A	P28 (SLS harn) PIN 2	MAIN	0.0	0.0	F crimp	Shade motor 2A (SLS) PIN -	UAFT	0.0	2.0	splice2	16	yel	2C	2.0	104.02	Double window 2 slideout
SHADE MTR 2A	SHADE MTR 2B	Shade motor 2A (SLS) PIN +	UAFT	0.0	2.0	splice2	Shade motor 2B (SLS) PIN +	UAFT	6.5	2.0	splice	16	grn	2C	10.5	104.03	Double window 2 slideout
SHADE MTR 2A	SHADE MTR 2B	Shade motor 2A (SLS) PIN -	UAFT	0.0	2.0	splice2	Shade motor 2B (SLS) PIN -	UAFT	6.5	2.0	splice	16	yel	2C	10.5	104.04	Double window 2 slideout
P28-3	SHADE MTR 3B	P28 (SLS harn) PIN 3	MAIN	0.0	0.0	F crimp	Shade motor 3B (SLS) PIN +	UFWD	6.5	2.0	splice2	16	grn	2C	8.5	109.01	Double window 3 slideout
P28-4	SHADE MTR 3B	P28 (SLS harn) PIN 4	MAIN	0.0	0.0	F crimp	Shade motor 3B (SLS) PIN -	UFWD	6.5	2.0	splice2	16	yel	2C	8.5	109.02	Double window 3 slideout
SHADE MTR 3B	SHADE MTR 3A	Shade motor 3B (SLS) PIN +	UFWD	6.5	2.0	splice2	Shade motor 3A (SLS) PIN +	UFWD	8.5	2.0	splice	16	grn	2C	6.0	109.03	Double window 3 slideout
SHADE MTR 3B	SHADE MTR 3A	Shade motor 3B (SLS) PIN -	UFWD	6.5	2.0	splice2	Shade motor 3A (SLS) PIN -	UFWD	8.5	2.0	splice	16	yel	2C	6.0	109.04	Double window 3 slideout
P18-1	SHADE MTR 4	P18 PIN 1	MAIN	0.0	0.0	F crimp	Shade motor 4 PIN +	UPPER	0.0	4.0	splice	16	grn	2C	4.0	115.01	Window 4
P18-2	SHADE MTR 4	P18 PIN 2	MAIN	0.0	0.0	F crimp	Shade motor 4 PIN -	UPPER	0.0	4.0	splice	16	yel	2C	4.0	115.02	Window 4
P18-3	SHADE MTR 5	P18 PIN 3	MAIN	0.0	0.0	F crimp	Shade motor 5 PIN +	POST	4.0	4.0	splice	16	grn	2C	8.0	116.01	Window 5
P18-4	SHADE MTR 5	P18 PIN 4	MAIN	0.0	0.0	F crimp	Shade motor 5 PIN -	POST	4.0	4.0	splice	16	yel	2C	8.0	116.02	Window 5
P18-5	SHADE MTR 6	P18 PIN 5	MAIN	0.0	0.0	F crimp	Shade motor 6 PIN +	POST	4.0	4.0	splice	16	grn	2C	8.0	117.01	Window 6
P18-6	SHADE MTR 6	P18 PIN 6	MAIN	0.0	0.0	F crimp	Shade motor 6 PIN -	POST	4.0	4.0	splice	16	yel	2C	8.0	117.02	Window 6
P18-7	SHADE MTR 7	P18 PIN 7	MAIN	0.0	0.0	F crimp	Shade motor 7 PIN +	UPPER	4.0	3.5	splice	16	grn	2C	7.5	118.01	Window 7
P18-8	SHADE MTR 7	P18 PIN 8	MAIN	0.0	0.0	F crimp	Shade motor 7 PIN -	UPPER	4.0	3.5	splice	16	yel	2C	7.5	118.02	Window 7
P18-9	SHADE MTR 8	P18 PIN 9	MAIN	0.0	0.0	F crimp	Shade motor 8 PIN +	UPPER	4.0	3.5	splice	16	grn	2C	7.5	119.01	Window 8
P18-10	SHADE MTR 8	P18 PIN 10	MAIN	0.0	0.0	F crimp	Shade motor 8 PIN -	UPPER	4.0	3.5	splice	16	yel	2C	7.5	119.02	Window 8
P18-11	SHADE MTR 9	P18 PIN 11	MAIN	0.0	0.0	F crimp	Shade motor 9 PIN +	UPPER	8.0	5.5	splice	16	grn	2C	13.5	120.01	Window 9
P18-12	SHADE MTR 9	P18 PIN 12	MAIN	0.0	0.0	F crimp	Shade motor 9 PIN -	UPPER	8.0	5.5	splice	16	yel	2C	13.5	120.02	Window 9
P18-13	SHADE MTR 10	P18 PIN 13	MAIN	0.0	0.0	F crimp	Shade motor 10 PIN +	UPPER	8.0	5.5	splice	16	grn	2C	13.5	121.01	Window 10
P18-14	SHADE MTR 10	P18 PIN 14	MAIN	0.0	0.0	F crimp	Shade motor 10 PIN -	UPPER	8.0	5.5	splice	16	yel	2C	13.5	121.02	Window 10
P1-1	SHADE MTR 11	P1 PIN 1	MAIN	0.0	0.0	F crimp	Shade motor 11 PIN +	RUF	16.0	2.0	splice	16	grn	2C	18.0	123.01	Window 11
P1-2	SHADE MTR 11	P1 PIN 2	MAIN	0.0	0.0	F crimp	Shade motor 11 PIN -	RUF	16.0	2.0	splice	16	yel	2C	18.0	123.02	Window 11

WIRE LABEL LINE 1	LINE 2	FROM LOCATION	Branch	Run	Offset	Term	TO LOCATION	Branch	Run	Offset	Term	WIRE AWG	Color	Type	Length	Wire #	Notes
P1-3	SHADE MTR 12	P1 PIN 3	MAIN	0.0	0.0	F crimp	Shade motor 12 PIN +	RUF	10.0	2.0	splice	16	grn	2C	12.0	127.01	Single window 12
P1-4	SHADE MTR 12	P1 PIN 4	MAIN	0.0	0.0	F crimp	Shade motor 12 PIN -	RUF	10.0	2.0	splice	16	yel	2C	12.0	127.02	Single window 12
P1-5	SHADE MTR 13	P1 PIN 5	MAIN	0.0	0.0	F crimp	Shade motor 13 PIN +	RUF	4.5	2.0	splice	16	grn	2C	6.5	131.01	Single window 13
P1-6	SHADE MTR 13	P1 PIN 6	MAIN	0.0	0.0	F crimp	Shade motor 13 PIN -	RUF	4.5	2.0	splice	16	yel	2C	6.5	131.02	Single window 13
P1-7	SHADE MTR 14	P1 PIN 7	MAIN	0.0	0.0	F crimp	Shade motor 14 PIN +	RUF	1.5	2.0	splice	16	grn	2C	3.5	134.01	Window 14
P1-8	SHADE MTR 14	P1 PIN 8	MAIN	0.0	0.0	F crimp	Shade motor 14 PIN -	RUF	1.5	2.0	splice	16	yel	2C	3.5	134.02	Window 14
P1-9	SHADE MTR 15	P1 PIN 9	MAIN	0.0	0.0	F crimp	Shade motor 15 PIN +	RUA	19.0	2.0	splice	16	grn	2C	21.0	137.01	Single shade window 15
P1-10	SHADE MTR 15	P1 PIN 10	MAIN	0.0	0.0	F crimp	Shade motor 15 PIN +	RUA	19.0	2.0	splice	16	yel	2C	21.0	137.02	Single shade window 15
P26-3	J55-3	P26 PIN 3	MAIN	0.0	0.0	F crimp	J55 PIN 3	AFT	31.0	1.0	M crimp	18	red	6C	32.0	150.01	Shade switch P101.115
P26-4	J55-4	P26 PIN 4	MAIN	0.0	0.0	F crimp	J55 PIN 4	AFT	31.0	1.0	M crimp	18	grn	6C	32.0	150.02	Shade switch P101.115
P26-5	J55-5	P26 PIN 5	MAIN	0.0	0.0	F crimp	J55 PIN 5	AFT	31.0	1.0	M crimp	18	blk	6C	32.0	150.03	Shade switch P101.115
P26-6	J55-6	P26 PIN 6	MAIN	0.0	0.0	F crimp	J55 PIN 6	AFT	31.0	1.0	M crimp	18	wht	6C	32.0	150.04	Shade switch P101.115
P26-7	J55-7	P26 PIN 7	MAIN	0.0	0.0	F crimp	J55 PIN 7	AFT	31.0	1.0	M crimp	18	brn	6C	32.0	150.05	Shade switch P101.115
P26-8	J55-8	P26 PIN 8	MAIN	0.0	0.0	F crimp	J55 PIN 8	AFT	31.0	1.0	M crimp	18	blu	6C	32.0	150.06	Shade switch P101.115
P55-3	SHADE SW 1	P55 PIN 3	MAIN	0.0	0.0	F crimp2	P101 PIN 1	LOWER	8.0	6.0	F IDC	18	red	6C	14.0	151.01	Shade switch P101
P55-4	SHADE SW 1	P55 PIN 4	MAIN	0.0	0.0	F crimp2	P101 PIN 2	LOWER	8.0	6.0	F IDC	18	grn	6C	14.0	151.02	Shade switch P101
P55-5	SHADE SW 1	P55 PIN 5	MAIN	0.0	0.0	F crimp2	P101 PIN 3	LOWER	8.0	6.0	F IDC	18	blk	6C	14.0	151.03	Shade switch P101
P55-6	SHADE SW 1	P55 PIN 6	MAIN	0.0	0.0	F crimp2	P101 PIN 4	LOWER	8.0	6.0	F IDC	18	wht	6C	14.0	151.04	Shade switch P101
P55-7	SHADE SW 1	P55 PIN 7	MAIN	0.0	0.0	F crimp2	P101 PIN 5	LOWER	8.0	6.0	F IDC	18	brn	6C	14.0	151.05	Shade switch P101
P55-8	SHADE SW 1	P55 PIN 8	MAIN	0.0	0.0	F crimp2	P101 PIN 6	LOWER	8.0	6.0	F IDC	18	blu	6C	14.0	151.06	Shade switch P101
P55-3	SHADE SW 15	P55 PIN 3	MAIN	0.0	0.0	F crimp2	P115 PIN 1	LOWER	1.0	6.0	F IDC	18	red	6C	7.0	152.01	Shade switch P115
P55-4	SHADE SW 15	P55 PIN 4	MAIN	0.0	0.0	F crimp2	P115 PIN 2	LOWER	1.0	6.0	F IDC	18	grn	6C	7.0	152.02	Shade switch P115
P55-5	SHADE SW 15	P55 PIN 5	MAIN	0.0	0.0	F crimp2	P115 PIN 3	LOWER	1.0	6.0	F IDC	18	blk	6C	7.0	152.03	Shade switch P115
P55-6	SHADE SW 15	P55 PIN 6	MAIN	0.0	0.0	F crimp2	P115 PIN 4	LOWER	1.0	6.0	F IDC	18	wht	6C	7.0	152.04	Shade switch P115
P55-7	SHADE SW 15	P55 PIN 7	MAIN	0.0	0.0	F crimp2	P115 PIN 5	LOWER	1.0	6.0	F IDC	18	brn	6C	7.0	152.05	Shade switch P115
P55-8	SHADE SW 15	P55 PIN 8	MAIN	0.0	0.0	F crimp2	P115 PIN 6	LOWER	1.0	6.0	F IDC	18	blu	6C	7.0	152.06	Shade switch P115
P13-10	J118-1	P13 PIN 10	MAIN	0.0	0.0	F crimp	J118 PIN 1	POST	3.0	5.0	M crimp2	18	blk	6C	8.0	156.01	Shade sw 3.4.11.12
P13-11	J118-2	P13 PIN 11	MAIN	0.0	0.0	F crimp	J118 PIN 2	POST	3.0	5.0	M crimp2	18	red	6C	8.0	156.02	Shade 3.4.11.12
P13-12	J118-3	P13 PIN 12	MAIN	0.0	0.0	F crimp	J118 PIN 3	POST	3.0	5.0	M crimp	18	wht	6C	8.0	156.03	Shade 3.4.11.12
P13-13	J118-4	P13 PIN 13	MAIN	0.0	0.0	F crimp	J118 PIN 4	POST	3.0	5.0	M crimp2	18	brn	6C	8.0	156.04	Shade 3.4.11.12
P13-14	J118-5	P13 PIN 14	MAIN	0.0	0.0	F crimp	J118 PIN 5	POST	3.0	5.0	M crimp	18	blu	6C	8.0	156.05	Shade 3.4.11.12
P13-15	J118-6	P13 PIN 15	MAIN	0.0	0.0	F crimp	J118 PIN 6	POST	3.0	5.0	M crimp	18	grn	6C	8.0	156.06	Shade 3.4.11.12
J118-1	J104-1	J118 PIN 1	POST	3.0	5.0	M crimp2	J104 PIN 1	UPPER	0.0	8.0	M crimp	18	blk	6C	16.0	157.01	Shade 4
J118-2	J104-2	J118 PIN 2	POST	3.0	5.0	M crimp2	J104 PIN 2	UPPER	0.0	8.0	M crimp	18	red	6C	16.0	157.02	Shade switch J104
J118-4	J104-4	J118 PIN 4	POST	3.0	5.0	M crimp2	J104 PIN 4	UPPER	0.0	8.0	M crimp	18	wht	6C	16.0	157.03	Shade switch J104
P28-5	J103-1	P28 (SLS harn) PIN 5	MAIN	0.0	0.0	F crimp	J103 (SLS) PIN 1	LAFT	0.0	6.0	M crimp	18	blk	6C	6.0	166.01	Shade switch J103
P28-6	J103-2	P28 (SLS harn) PIN 6	MAIN	0.0	0.0	F crimp	J103 (SLS) PIN 2	LAFT	0.0	6.0	M crimp	18	red	6C	6.0	166.02	Shade switch J103
P28-8	J103-4	P28 (SLS harn) PIN 8	MAIN	0.0	0.0	F crimp	J103 (SLS) PIN 4	LAFT	0.0	6.0	M crimp	18	wht	6C	6.0	166.03	Shade switch J103
P28-9	J103-5	P28 (SLS harn) PIN 9	MAIN	0.0	0.0	F crimp	J103 (SLS) PIN 5	LAFT	0.0	6.0	M crimp	18	brn	6C	6.0	166.04	Shade switch J103
P28-10	J103-6	P28 (SLS harn) PIN 10	MAIN	0.0	0.0	F crimp	J103 (SLS) PIN 6	LAFT	0.0	6.0	M crimp	18	blu	6C	6.0	166.05	Shade switch J103
P2-1	J111-1	P2 PIN 1	MAIN	0.0	0.0	F crimp	J111 PIN 1	RUF	16.0	5.0	M crimp2	18	blk	6C	21.0	240.01	Shade switch J111.112.113
P2-2	J111-2	P2 PIN 2	MAIN	0.0	0.0	F crimp	J111 PIN 2	RUF	16.0	5.0	M crimp2	18	red	6C	21.0	240.02	Shade switch J111.112.113
P2-4	J111-3	P2 PIN 4	MAIN	0.0	0.0	F crimp	J111 PIN 3	RUF	16.0	5.0	M crimp2	18	wht	6C	21.0	240.03	Shade switch J111.112.113
P2-5	J111-4	P2 PIN 5	MAIN	0.0	0.0	F crimp	J111 PIN 4	RUF	16.0	5.0	M crimp2	18	brn	6C	21.0	240.04	Shade switch J111.112.113
P2-6	J111-5	P2 PIN 6	MAIN	0.0	0.0	F crimp	J111 PIN 5	RUF	16.0	5.0	M crimp2	18	blu	6C	21.0	240.05	Shade switch J111.112.113
P2-7	J111-6	P2 PIN 7	MAIN	0.0	0.0	F crimp	J111 PIN 6	RUF	16.0	5.0	M crimp2	18	grn	6C	21.0	240.06	Shade switch J111.112.113
J111-1	J112-1	J111 PIN 1	RUF	16.0	5.0	M crimp2	J112 PIN 1	RUF	10.5	5.0	M crimp2	18	blk	6C	15.5	240.07	Shade switch J111.112.113
J111-2	J112-2	J111 PIN 2	RUF	16.0	5.0	M crimp2	J112 PIN 2	RUF	10.5	5.0	M crimp2	18	red	6C	15.5	240.08	Shade switch J111.112.113
J111-3	J112-3	J111 PIN 3	RUF	16.0	5.0	M crimp2	J112 PIN 3	RUF	10.5	5.0	M crimp2	18	wht	6C	15.5	240.09	Shade switch J111.112.113
J111-4	J112-4	J111 PIN 4	RUF	16.0	5.0	M crimp2	J112 PIN 4	RUF	10.5	5.0	M crimp2	18	brn	6C	15.5	240.10	Shade switch J111.112.113
J111-5	J112-5	J111 PIN 5	RUF	16.0	5.0	M crimp2	J112 PIN 5	RUF	10.5	5.0	M crimp2	18	blu	6C	15.5	240.11	Shade switch J111.112.113
J111-6	J112-6	J111 PIN 6	RUF	16.0	5.0	M crimp2	J112 PIN 6	RUF	10.5	5.0	M crimp2	18	grn	6C	15.5	240.12	Shade switch J111.112.113
J112-1	J113-1	J112 PIN 1	RUF	10.5	5.0	M crimp2	J113 PIN 1	RUF	5.0	5.0	M crimp	18	blk	6C	15.5	240.13	Shade switch J111.112.113
J112-2	J113-2	J112 PIN 2	RUF	10.5	5.0	M crimp2	J113 PIN 2	RUF	5.0	5.0	M crimp	18	red	6C	15.5	240.14	Shade switch J111.112.113
J112-3	J113-3	J112 PIN 3	RUF	10.5	5.0	M crimp2	J113 PIN 3	RUF	5.0	5.0	M crimp	18	wht	6C	15.5	240.15	Shade switch J111.112.113
J112-4	J113-4	J112 PIN 4	RUF	10.5	5.0	M crimp2	J113 PIN 4	RUF	5.0	5.0	M crimp	18	brn	6C	15.5	240.16	Shade switch J111.112.113
J112-5	J113-5	J112 PIN 5	RUF	10.5	5.0	M crimp2	J113 PIN 5	RUF	5.0	5.0	M crimp	18	blu	6C	15.5	240.17	Shade switch J111.112.113
J112-6	J113-6	J112 PIN 6	RUF	10.5	5.0	M crimp2	J113 PIN 6	RUF	5.0	5.0	M crimp	18	grn	6C	15.5	240.18	Shade switch J111.112.113
P27-11	GRAY DUMP	P27 PIN 11	MAIN	0.0	0.0	F crimp	Left gray dump valve PIN +	AFT	17.0	6.0	splice	16	org	2C	23.0	300.01	
P27-12	GRAY DUMP	P27 PIN 12	MAIN	0.0	0.0	F crimp	Left gray dump valve PIN -	AFT	17.0	6.0	splice	16	blk	2C	23.0	300.02	
P27-13	BLACK DUMP	P27 PIN 13	MAIN	0.0	0.0	F crimp	Left black dump valve PIN +	AFT	17.0	6.0	splice	16	org	2C	23.0	301.01	

WIRE LABEL LINE 1	LINE 2	FROM LOCATION	Branch	Run	Offset	Term	TO LOCATION	Branch	Run	Offset	Term	WIRE AWG	Color	Type	Length	Wire #	Notes
P27-14	BLACK DUMP	P27 PIN 14	MAIN	0.0	0.0	F crimp	Left black dump valve PIN -	AFT	17.0	6.0	splice	16	blk	2C	23.0	301.02	
P21-1	FLOAT SWITCH	P21 PIN 1	MAIN	0.0	0.0	F crimp	Float switch PIN LOAD	AFT	17.0	6.0	splice	16	org	2C	23.0	304.01	
P21-2	FLOAT SWITCH	P21 PIN 2	MAIN	0.0	0.0	F crimp	Float switch PIN LINE	AFT	17.0	6.0	splice	16	blk	2C	23.0	304.02	
P21-3	FRESH FILL	P21 PIN 3	MAIN	0.0	0.0	F crimp	Fresh water fill valve PIN +	AFT	17.0	6.0	splice	16	red	2C	23.0	305.01	
P21-4	FRESH FILL	P21 PIN 4	MAIN	0.0	0.0	F crimp	Fresh water fill valve PIN -	AFT	17.0	6.0	splice	16	blk	2C	23.0	305.02	
P21-5	TOILET VALVE	P21 PIN 5	MAIN	0.0	0.0	F crimp	Toilet valve PIN +	AFT	20.0	10.0	splice	16	org	2C	30.0	306.01	
P21-6	TOILET VALVE	P21 PIN 6	MAIN	0.0	0.0	F crimp	Toilet valve PIN -	AFT	20.0	10.0	splice	16	blk	2C	30.0	306.02	
P23-11	J151-7	P23 PIN 11	MAIN	0.0	0.0	F crimp	J151 PIN 7	AFT	17.0	5.0	M crimp	22	blu	12C	22.0	311.01	Ext light right green LED +
P23-12	J151-8	P23 PIN 12	MAIN	0.0	0.0	F crimp	J151 PIN 8	AFT	17.0	5.0	M crimp	22	vio	12C	22.0	311.02	Ext light right red LED +
P23-13	J151-9	P23 PIN 13	MAIN	0.0	0.0	F crimp	J151 PIN 9	AFT	17.0	5.0	M crimp	22	gry	12C	22.0	311.03	Ext light right trigger
P23-14	J151-10	P23 PIN 14	MAIN	0.0	0.0	F crimp	J151 PIN 10	AFT	17.0	5.0	M crimp	22	wht	12C	22.0	311.04	Ext light right 12 VDC
P7-11	J301-4	P7 PIN 11	MAIN	0.0	0.0	F crimp	J301 PIN 4	LUF	.5	7.0	M crimp	16	red	2C	7.5	340.01	Control panel P101
P7-12	J301-5	P7 PIN 12	MAIN	0.0	0.0	F crimp	J301 PIN 5	LUF	.5	7.0	M crimp	16	blk	2C	7.5	340.02	Control panel P101
P51-3	J301-8	P51 PIN 3	MAIN	13.5	3.0	F crimp	J301 PIN 8	LUF	.5	7.0	M crimp	18	brn	6C	24.0	341.01	
P51-1	J301-1	P51 PIN 1	MAIN	13.5	3.0	F crimp	J301 PIN 1	LUF	.5	7.0	M crimp	18	blk	6C	24.0	342.01	
P51-2	J301-2	P51 PIN 2	MAIN	13.5	3.0	F crimp	J301 PIN 2	LUF	.5	7.0	M crimp	18	red	6C	24.0	342.02	
P51-4	J301-3	P51 PIN 4	MAIN	13.5	3.0	F crimp	J301 PIN 3	LUF	.5	7.0	M crimp	18	grn	6C	24.0	342.03	
P7-9	J301-6	P7 PIN 9	MAIN	0.0	0.0	F crimp	J301 PIN 6	LUF	.5	7.0	M crimp	16	red	2C	7.5	350.01	Level gauge/MDP power
P7-10	J301-7	P7 PIN 10	MAIN	0.0	0.0	F crimp	J301 PIN 7	LUF	.5	7.0	M crimp	16	blk	2C	7.5	350.02	Level gauge/MDP ground
P52 TANKS-13	J309-5	P52 PIN 13	MAIN	15.0	3.0	F crimp	J309 PIN 5	LUF	.5	7.0	M crimp	16	red	2C	25.5	361.01	Dual gauge system only
P52 TANKS-14	J309-6	P52 PIN 14	MAIN	15.0	3.0	F crimp	J309 PIN 6	LUF	.5	7.0	M crimp	16	blk	2C	25.5	361.02	Dual gauge system only
P52 TANKS-1	J309-1	P52 PIN 1	MAIN	15.0	3.0	F crimp	J309 PIN 1	LUF	.5	7.0	M crimp	18	blk	3C+S	25.5	361.03	Dual gauge system only
P52 TANKS-3	J309-3	P52 PIN 3	MAIN	15.0	3.0	F crimp	J309 PIN 3	LUF	.5	7.0	M crimp	18	wht	3C+S	25.5	361.04	Dual gauge system only
P52 TANKS-4	J309-4	P52 PIN 4	MAIN	15.0	3.0	F crimp	J309 PIN 4	LUF	.5	7.0	M crimp	22	shd	3C+S	25.5	361.05	Dual gauge system only
P52 TANKS-5	J310-1	P52 PIN 5	MAIN	15.0	3.0	F crimp	J310 PIN 1	LUF	.5	7.0	M crimp	18	blk	3C+S	25.5	361.06	Dual gauge system only
P52 TANKS-7	J310-3	P52 PIN 7	MAIN	15.0	3.0	F crimp	J310 PIN 3	LUF	.5	7.0	M crimp	18	wht	3C+S	25.5	361.07	Dual gauge system only
P52 TANKS-8	J310-4	P52 PIN 8	MAIN	15.0	3.0	F crimp	J310 PIN 4	LUF	.5	7.0	M crimp	22	shd	3C+S	25.5	361.08	Dual gauge system only
P52 TANKS-9	J311-1	P52 PIN 9	MAIN	15.0	3.0	F crimp	J311 PIN 1	LUF	.5	7.0	M crimp	18	blk	3C+S	25.5	361.09	Dual gauge system only
P52 TANKS-11	J311-3	P52 PIN 11	MAIN	15.0	3.0	F crimp	J311 PIN 3	LUF	.5	7.0	M crimp	18	wht	3C+S	25.5	361.10	Dual gauge system only
P52 TANKS-12	J311-4	P52 PIN 12	MAIN	15.0	3.0	F crimp	J311 PIN 4	LUF	.5	7.0	M crimp	22	shd	3C+S	25.5	361.11	Dual gauge system only
J52 TANKS-13	J312-5	J52 PIN 13	AFT	12.0	8.0	M crimp	J312 PIN 5	AFT	20.0	5.0	M crimp	16	red	2C	21.0	362.01	Dual gauge system only
J52 TANKS-14	J312-6	J52 PIN 14	AFT	12.0	8.0	M crimp	J312 PIN 6	AFT	20.0	5.0	M crimp	16	blk	2C	21.0	362.02	Dual gauge system only
J52 TANKS-1	J312-1	J52 PIN 1	AFT	12.0	8.0	M crimp	J312 PIN 1	AFT	20.0	5.0	M crimp	18	blk	3C+S	21.0	362.03	Dual gauge system only
J52 TANKS-2	J312-2	J52 PIN 2	AFT	12.0	8.0	M crimp	J312 PIN 2	AFT	20.0	5.0	M crimp	18	red	3C+S	21.0	362.04	Dual gauge system only
J52 TANKS-3	J312-3	J52 PIN 3	AFT	12.0	8.0	M crimp	J312 PIN 3	AFT	20.0	5.0	M crimp	18	wht	3C+S	21.0	362.05	Dual gauge system only
J52 TANKS-4	J312-4	J52 PIN 4	AFT	12.0	8.0	M crimp	J312 PIN 4	AFT	20.0	5.0	M crimp	22	shd	3C+S	21.0	362.06	Dual gauge system only
J52 TANKS-5	J313-1	J52 PIN 5	AFT	12.0	8.0	M crimp	J313 PIN 1	AFT	20.0	5.0	M crimp	18	blk	3C+S	21.0	362.07	Dual gauge system only
J52 TANKS-6	J313-2	J52 PIN 6	AFT	12.0	8.0	M crimp	J313 PIN 2	AFT	20.0	5.0	M crimp	18	red	3C+S	21.0	362.08	Dual gauge system only
J52 TANKS-7	J313-3	J52 PIN 7	AFT	12.0	8.0	M crimp	J313 PIN 3	AFT	20.0	5.0	M crimp	18	wht	3C+S	21.0	362.09	Dual gauge system only
J52 TANKS-8	J313-4	J52 PIN 8	AFT	12.0	8.0	M crimp	J313 PIN 4	AFT	20.0	5.0	M crimp	22	shd	3C+S	21.0	362.10	Dual gauge system only
J52 TANKS-9	J314-1	J52 PIN 9	AFT	12.0	8.0	M crimp	J314 PIN 1	AFT	20.0	5.0	M crimp	18	blk	3C+S	21.0	362.11	Dual gauge system only
J52 TANKS-10	J314-2	J52 PIN 10	AFT	12.0	8.0	M crimp	J314 PIN 2	AFT	20.0	5.0	M crimp	18	red	3C+S	21.0	362.12	Dual gauge system only
J52 TANKS-11	J314-3	J52 PIN 11	AFT	12.0	8.0	M crimp	J314 PIN 3	AFT	20.0	5.0	M crimp	18	wht	3C+S	21.0	362.13	Dual gauge system only
J52 TANKS-12	J314-4	J52 PIN 12	AFT	12.0	8.0	M crimp	J314 PIN 4	AFT	20.0	5.0	M crimp	22	shd	3C+S	21.0	362.14	Dual gauge system only
P23-5	PREVOST CB52	P23 PIN 5	MAIN	0.0	0.0	F crimp	Prevost breaker CB52 (RT) PIN LOAD	AFT	31.0	10.0	#8 lug	16	red	1C	41.0	375.01	Bay light defeat
P23-6	PR 24-10-14	P23 PIN 6	MAIN	0.0	0.0	F crimp	Prevost wire 24-10-14 (RT)	AFT	31.0	10.0	splice	16	blk	1C	41.0	375.02	Bay light defeat
P7-1	J910 FAN PWR	P7 PIN 1	MAIN	0.0	0.0	F crimp	J910 PIN 1	LUA	7.0	4.0	M crimp	16	red	2C	11.0	380.01	Shower fan power (black)
P7-2	J910 FAN PWR	P7 PIN 2	MAIN	0.0	0.0	F crimp	J910 PIN 2	LUA	7.0	4.0	M crimp	16	blk	2C	11.0	380.02	Shower fan power (white)
P12-1	J911 FAN CTL	P12 PIN 1	MAIN	0.0	0.0	F crimp	J911 PIN 1	RUA	11.0	4.0	M crimp	16	red	2C	15.0	380.03	Shower fan power (red)
P12-2	J911 FAN CTL	P12 PIN 2	MAIN	0.0	0.0	F crimp	J911 PIN 2	RUA	11.0	4.0	M crimp	16	blk	2C	15.0	380.04	Shower fan power (red)
J910 FAN PWR	J912 FAN TST	J910 PIN 2,3	LUA	7.0	4.0	M crimp	J912 PIN 2,3	RUA	11.0	4.0	M crimp	18	-	6C	26.0	380.05	Shower fan thermostat
P7-3	J913 FAN PWR	P7 PIN 3	MAIN	0.0	0.0	F crimp	J913 PIN 1	LUA	2.5	4.0	M crimp	16	red	2C	6.5	385.01	Private lav fan power (black)
P7-4	J913 FAN PWR	P7 PIN 4	MAIN	0.0	0.0	F crimp	J913 PIN 2	LUA	2.5	4.0	M crimp	16	blk	2C	6.5	385.02	Private lav fan power (white)
P12-3	J914 FAN CTL	P12 PIN 3	MAIN	0.0	0.0	F crimp	J914 PIN 1	LUA	1.5	4.0	M crimp	16	red	2C	5.5	385.03	Private lav fan power (red)
P12-4	J914 FAN CTL	P12 PIN 4	MAIN	0.0	0.0	F crimp	J914 PIN 2	LUA	1.5	4.0	M crimp	16	blk	2C	5.5	385.04	Private lav fan power (red)
J913 FAN PWR	J915 FAN TST	J913 PIN 2,3	LUA	2.5	4.0	M crimp	J915 PIN 2,3	LUA	1.5	4.0	M crimp	18	-	6C	9.0	385.05	Private lav fan thermostat
P24-1	J402-1	P24 PIN 1	MAIN	0.0	0.0	F crimp	J402 PIN 1	AFT	17.0	7.0	M crimp	10	red	1C	24.0	400.01	AQ power
P24-2	J402-2	P24 PIN 2	MAIN	0.0	0.0	F crimp	J402 PIN 2	AFT	17.0	7.0	M crimp	10	blk	1C	24.0	400.02	AQ ground
P24-3	J402-3	P24 PIN 3	MAIN	0.0	0.0	F crimp	J402 PIN 3	AFT	17.0	7.0	M crimp	16	red	1C	24.0	400.03	AQ enable

WIRE LABEL LINE 1	LINE 2	FROM LOCATION	Branch	Run	Offset	Term	TO LOCATION	Branch	Run	Offset	Term	WIRE AWG	Color	Type	Length	Wire #	Notes
P24-4	J402-4	P24 PIN 4	MAIN	0.0	0.0	F crimp	J402 PIN 4	AFT	17.0	7.0	M crimp	16	blk	1C	24.0	400.04	AQ engine heat
P24-5	J402-5	P24 PIN 5	MAIN	0.0	0.0	F crimp	J402 PIN 5	AFT	17.0	7.0	M crimp	16	gry	1C	24.0	400.05	AQ indicator
J58-3	J401-9	J58 PIN 3	FWD	5.0	6.0	F crimp	J401 PIN 9	AFT	17.0	7.0	M crimp	16	red	2C	35.0	405.02	Aq hot fwd tstat line
J58-4	J401-8	J58 PIN 4	FWD	5.0	6.0	F crimp	J401 PIN 8	AFT	17.0	7.0	M crimp	16	blk	2C	35.0	405.03	Aq hot fwd tstat load
P58-3	AQ FWD TSTAT	P58 PIN 3	MAIN	2.0	1.0	F crimp	Aq hot fwd thermostat PIN LOAD	MAIN	4.0	10.0	pigtail	16	red	2C	13.0	405.04	Aq hot fwd tstat line
P58-4	AQ FWD TSTAT	P58 PIN 4	MAIN	2.0	1.0	F crimp	Aq hot fwd thermostat PIN LINE	MAIN	4.0	10.0	pigtail	16	blk	2C	13.0	405.05	Aq hot fwd tstat load
J54-9	J401-5	J54 PIN 9	AFT	31.0	1.0	M crimp	J401 PIN 5	AFT	17.0	7.0	M crimp	16	red	2C	22.0	407.01	Aq rear tstat in slideout
J54-10	J401-6	J54 PIN 10	AFT	31.0	1.0	M crimp	J401 PIN 6	AFT	17.0	7.0	M crimp	16	blk	2C	22.0	407.02	Aq rear tstat in slideout
P54-9	AQ AFT TSTAT	P54 PIN 9	MAIN	0.0	0.0	F crimp	Aq hot aft tstat (SRL) PIN LOAD	LFWD	8.0	7.0	pigtail	16	red	2C	15.0	407.03	Aq rear tstat in slideout
P54-10	AQ AFT TSTAT	P54 PIN 10	MAIN	0.0	0.0	F crimp	Aq hot aft tstat (SRL) PIN LINE	LFWD	8.0	7.0	pigtail	16	blk	2C	15.0	407.04	Aq rear tstat in slideout
J402-7	AQ STEP FAN	J402 PIN 7	AFT	17.0	7.0	M crimp	Aq hot stepwell fan PIN +	FWD	5.0	3.0	splice	16	red	2C	32.0	410.01	
J402-8	AQ STEP FAN	J402 PIN 8	AFT	17.0	7.0	M crimp	Aq hot stepwell fan PIN -	FWD	5.0	3.0	splice	16	blk	2C	32.0	410.02	
J401-1	J53-1	J401 PIN 1	AFT	17.0	7.0	M crimp2	J53 PIN 1	AFT	12.0	8.0	M crimp	16	red	2C	20.0	412.01	AQ forward fans
J401-2	J53-2	J401 PIN 2	AFT	17.0	7.0	M crimp2	J53 PIN 2	AFT	12.0	8.0	M crimp	16	blk	2C	20.0	412.02	AQ forward fans
P53-1	AQ GAL FAN	P53 PIN 1	MAIN	13.5	3.0	F crimp	Aq hot galley fan PIN +	AFT	.5	4.0	splice	16	red	2C	21.0	412.03	
P53-2	AQ GAL FAN	P53 PIN 2	MAIN	13.5	3.0	F crimp	Aq hot galley fan PIN -	AFT	.5	4.0	splice	16	blk	2C	21.0	412.04	
J401-1	J58-1	J401 PIN 1	AFT	17.0	7.0	M crimp2	J58 PIN 1	FWD	5.0	6.0	M crimp	16	red	2C	35.0	414.01	
J401-2	J58-2	J401 PIN 2	AFT	17.0	7.0	M crimp2	J58 PIN 2	FWD	5.0	6.0	M crimp	16	blk	2C	35.0	414.02	
P58-1	AQ DRV FAN	P58 PIN 1	MAIN	2.0	1.0	F crimp	Aq hot drivers fan PIN +	POST	0.0	7.0	splice	16	red	2C	10.0	414.03	
P58-2	AQ DRV FAN	P58 PIN 2	MAIN	2.0	1.0	F crimp	Aq hot drivers fan PIN -	POST	0.0	7.0	splice	16	blk	2C	10.0	414.04	
J53-3	J401-3	J53 PIN 3	AFT	12.0	8.0	M crimp	J401 PIN 3	AFT	17.0	7.0	M crimp	16	red	2C	20.0	416.01	AQ aft fans
J53-4	J401-4	J53 PIN 4	AFT	12.0	8.0	M crimp	J401 PIN 4	AFT	17.0	7.0	M crimp	16	blk	2C	20.0	416.02	AQ aft fans
P53-3	AQ BATH FAN	P53 PIN 3	MAIN	13.5	3.0	F crimp	Aq hot bath fan PIN +	RLA	7.0	4.0	splice	16	red	2C	27.5	416.03	
P53-4	AQ BATH FAN	P53 PIN 4	MAIN	13.5	3.0	F crimp	Aq hot bath fan PIN -	RLA	7.0	4.0	splice	16	blk	2C	27.5	416.04	
AQ BATH FAN	AQ STRM FAN	Aq hot bath fan PIN +	RLA	7.0	4.0	splice	Aq hot strm fan PIN +	RLA	11.0	4.0	splice	16	red	2C	12.0	418.03	
AQ BATH FAN	AQ STRM FAN	Aq hot bath fan PIN -	RLA	7.0	4.0	splice	Aq hot strm fan PIN -	RLA	11.0	4.0	splice	16	blk	2C	12.0	418.04	
P16-3	J118-7	P16 PIN 3	MAIN	0.0	0.0	F crimp	J118 PIN 7	POST	3.0	5.0	M crimp	18	red	6C	8.0	434.01	No bus air - drivers a/c sw
P16-4	J118-8	P16 PIN 4	MAIN	0.0	0.0	F crimp	J118 PIN 8	POST	3.0	5.0	M crimp	18	brn	6C	8.0	434.02	No bus air - drivers a/c sw
P16-10	J118-9	P16 PIN 10	MAIN	0.0	0.0	F crimp	J118 PIN 9	POST	3.0	5.0	M crimp	18	grn	6C	8.0	434.03	No bus air - drivers a/c sw
P16-13	J118-10	P16 PIN 13	MAIN	0.0	0.0	F crimp	J118 PIN 10	POST	3.0	5.0	M crimp	18	blu	6C	8.0	434.04	No bus air - drivers a/c sw
P16-14	J118-11	P16 PIN 14	MAIN	0.0	0.0	F crimp	J118 PIN 11	POST	3.0	5.0	M crimp	18	wht	6C	8.0	434.05	No bus air - drivers a/c sw
P14-7	STEP LGT A	P14 PIN 7	MAIN	0.0	0.0	F crimp	Stepwell light A PIN +	DASH	12.0	7.0	splice	16	grn	2C	19.0	500.01	
P14-8	STEP LGT A	P14 PIN 8	MAIN	0.0	0.0	F crimp	Stepwell light A PIN -	DASH	12.0	7.0	splice	16	wht	2C	19.0	500.02	
P14-3	ENTRY OHEAD	P14 PIN 3	MAIN	0.0	0.0	F crimp	Entry overhead light PIN +	UPPER	7.0	3.5	splice	16	grn	2C	10.5	501.01	
P14-4	ENTRY OHEAD	P14 PIN 4	MAIN	0.0	0.0	F crimp	Entry overhead light PIN -	UPPER	7.0	3.5	splice	16	wht	2C	10.5	501.02	
P14-1	DRV OHEAD SW	P14 PIN 1	MAIN	0.0	0.0	F crimp	Driver's overhead light sw PIN LINE	DASH	8.0	3.0	F faston	16	grn	2C	11.0	503.01	
P14-2	DRV OHEAD SW	P14 PIN 2	MAIN	0.0	0.0	F crimp	Driver's overhead light sw PIN splice	DASH	8.0	3.0	splice	16	wht	2C	11.0	503.02	
DRV OHEAD SW	DRV OVERHEAD	Driver's overhead light sw PIN LOAD	DASH	8.0	3.0	F faston	Driver's overhead light PIN +	UPPER	2.0	2.0	splice	16	grn	2C	15.0	503.03	
DRV OHEAD SW	DRV OVERHEAD	Driver's overhead light sw PIN splice	DASH	8.0	3.0	F crimp	Driver's overhead light PIN -	UPPER	2.0	2.0	splice	16	wht	2C	15.0	503.04	
P14-13	MAP LIGHT A	P14 PIN 13	MAIN	0.0	0.0	F crimp	Map light A PIN +	POST	3.0	2.0	splice	16	grn	2C	5.0	504.01	
P14-14	MAP LIGHT A	P14 PIN 14	MAIN	0.0	0.0	F crimp	Map light A PIN -	POST	3.0	2.0	splice	16	wht	2C	5.0	504.02	
MAP LIGHT A	MAP LIGHT B	Map light A PIN +	POST	3.0	2.0	splice	Map light B PIN +	UPPER	8.0	8.0	splice	16	grn	2C	21.0	504.03	
MAP LIGHT A	MAP LIGHT B	Map light A PIN -	POST	3.0	2.0	splice	Map light B PIN -	UPPER	8.0	8.0	splice	16	wht	2C	21.0	504.04	
P30-9	UNDER S/O LT	P30 (SLS) PIN 9	MAIN	0.0	0.0	F crimp	Under S/O lights (SLS) PIN +	LFWD	6.0	3.0	splice	16	wht	2C	9.0	505.01	Under S/O lights
P30-10	UNDER S/O LT	P30 (SLS) PIN 10	MAIN	0.0	0.0	F crimp	Under S/O lights (SLS) PIN -	LFWD	6.0	3.0	splice	16	grn	2C	9.0	505.02	Under S/O lights
P29-1	SAL L O/H C	P29 (SLS harn) PIN 1	MAIN	0.0	0.0	F crimp	Sal left o/h light (SLS harn)C PIN +	UFWD	1.5	3.0	splice2	16	grn	2C	4.5	507.03	Salon slideout only
P29-2	SAL L O/H C	P29 (SLS harn) PIN 2	MAIN	0.0	0.0	F crimp	Sal left o/h light (SLS harn)C PIN -	UFWD	1.5	3.0	splice2	16	wht	2C	4.5	507.04	Salon slideout only
SAL L O/H C	SAL L O/H B	Sal left o/h light (SLS harn)C PIN +	UFWD	1.5	3.0	splice2	Sal left o/h light (SLS harn)B PIN +	UFWD	3.5	3.0	splice2	16	grn	2C	8.0	507.05	Salon slideout only
SAL L O/H C	SAL L O/H B	Sal left o/h light (SLS harn)C PIN -	UFWD	1.5	3.0	splice2	Sal left o/h light (SLS harn)B PIN -	UFWD	3.5	3.0	splice2	16	wht	2C	8.0	507.06	Salon slideout only
SAL L O/H B	SAL L O/H A	Sal left o/h light (SLS harn)B PIN +	UFWD	3.5	3.0	splice2	Sal left o/h light (SLS harn)A PIN +	UFWD	5.5	3.0	splice	16	grn	2C	8.0	507.07	Salon slideout only
SAL L O/H B	SAL L O/H A	Sal left o/h light (SLS harn)B PIN -	UFWD	3.5	3.0	splice2	Sal left o/h light (SLS harn)A PIN -	UFWD	5.5	3.0	splice	16	wht	2C	8.0	507.08	Salon slideout only
P11-1	SAL L O/H A	P11 PIN 1	MAIN	0.0	0.0	F crimp	Sal left o/h light (U harn) A PIN +	CROSS	6.0	16.0	splice2	16	grn	2C	22.0	508.01	S/O. above driver's cabinet
P11-2	SAL L O/H A	P11 PIN 2	MAIN	0.0	0.0	F crimp	Sal left o/h light (U harn) A PIN -	CROSS	6.0	16.0	splice2	16	wht	2C	22.0	508.02	S/O. above driver's cabinet
P8-1	SAL COVERD B	P8 PIN 1	MAIN	0.0	0.0	F crimp	Sal left o/h light (sw) B PIN +	CROSS	6.0	10.5	splice2	16	grn	2C	16.5	509.03	Salon slideout only (covered)
P8-2	SAL COVERD B	P8 PIN 2	MAIN	0.0	0.0	F crimp	Sal left o/h light (sw) B PIN -	CROSS	6.0	10.5	splice2	16	wht	2C	16.5	509.04	Salon slideout only (covered)
SAL COVERD B	SAL COVERD A	Sal left o/h light (sw) B PIN +	CROSS	6.0	10.5	splice2	Sal left o/h light (sw) A PIN +	CROSS	6.0	13.5	splice	16	grn	2C	6.0	509.05	Salon slideout only (covered)
SAL COVERD B	SAL COVERD A	Sal left o/h light (sw) B PIN -	CROSS	6.0	10.5	splice2	Sal left o/h light (sw) A PIN -	CROSS	6.0	13.5	splice	16	wht	2C	6.0	509.06	Salon slideout only (covered)

WIRE LABEL LINE 1	LINE 2	FROM LOCATION	Branch	Run	Offset	Term	TO LOCATION	Branch	Run	Offset	Term	WIRE AWG	Color	Type	Length	Wire #	Notes
P3-9	SAL R O/H E	P3 PIN 9	MAIN	0.0	0.0	F crimp	Sal right o/h light E PIN +	RUF	11.0	3.0	splice2	16	grn	2C	14.0	510.03	
P3-10	SAL R O/H E	P3 PIN 10	MAIN	0.0	0.0	F crimp	Sal right o/h light E PIN -	RUF	11.0	3.0	splice2	16	wht	2C	14.0	510.04	
SAL R O/H E	SAL R O/H D	Sal right o/h light E PIN +	RUF	11.0	3.0	splice2	Sal right o/h light D PIN +	RUF	12.0	5.0	splice2	16	grn	2C	9.0	510.05	
SAL R O/H E	SAL R O/H D	Sal right o/h light E PIN -	RUF	11.0	3.0	splice2	Sal right o/h light D PIN -	RUF	12.0	5.0	splice2	16	wht	2C	9.0	510.06	
SAL R O/H D	SAL R O/H C	Sal right o/h light D PIN +	RUF	12.0	5.0	splice2	Sal right o/h light C PIN +	RUF	13.0	3.0	splice2	16	grn	2C	9.0	510.07	
SAL R O/H D	SAL R O/H C	Sal right o/h light D PIN -	RUF	12.0	5.0	splice2	Sal right o/h light C PIN -	RUF	13.0	3.0	splice2	16	wht	2C	9.0	510.08	
SAL R O/H C	SAL R O/H B	Sal right o/h light C PIN +	RUF	13.0	3.0	splice2	Sal right o/h light B PIN +	RUF	14.5	6.0	splice2	16	grn	2C	10.5	510.09	
SAL R O/H C	SAL R O/H B	Sal right o/h light C PIN -	RUF	13.0	3.0	splice2	Sal right o/h light B PIN -	RUF	14.5	6.0	splice2	16	wht	2C	10.5	510.10	
SAL R O/H B	SAL R O/H A	Sal right o/h light B PIN +	RUF	14.5	6.0	splice2	Sal right o/h light A PIN +	RUF	15.0	3.0	splice	16	grn	2C	9.5	510.11	
SAL R O/H B	SAL R O/H A	Sal right o/h light B PIN -	RUF	14.5	6.0	splice2	Sal right o/h light A PIN -	RUF	15.0	3.0	splice	16	wht	2C	9.5	510.12	
P30-5	SAL DISPLAY	P30 (SLS) PIN 5	MAIN	0.0	0.0	F crimp	Sal display light (SLS harn) PIN +	UAFT	1.5	3.0	splice	16	grn	2C	4.5	514.03	
P30-6	SAL DISPLAY	P30 (SLS) PIN 6	MAIN	0.0	0.0	F crimp	Sal display light (SLS harn) PIN -	UAFT	1.5	3.0	splice	16	wht	2C	4.5	514.04	
P4-7	SAL DISPLAY	P4 PIN 7	MAIN	0.0	0.0	F crimp	Sal display light (U harn) PIN +	RUF	9.5	3.0	splice	16	grn	2C	12.5	514.05	
P4-8	SAL DISPLAY	P4 PIN 8	MAIN	0.0	0.0	F crimp	Sal display light (U harn) PIN -	RUF	9.5	3.0	splice	16	wht	2C	12.5	514.06	
P3-7	DIN O/H b	P3 PIN 7	MAIN	0.0	0.0	F crimp	Dinette o/h light (U harn) B PIN +	RUF	5.5	5.0	splice2	16	grn	2C	10.5	521.01	
P3-8	DIN O/H b	P3 PIN 8	MAIN	0.0	0.0	F crimp	Dinette o/h light (U harn) B PIN -	RUF	5.5	5.0	splice2	16	wht	2C	10.5	521.02	
DIN O/H b	DIN O/H A	Dinette o/h light (U harn) B PIN +	RUF	5.5	5.0	splice2	Dinette o/h light (U harn) A PIN +	RUF	9.5	5.0	splice	16	grn	2C	14.0	521.03	
DIN O/H b	DIN O/H A	Dinette o/h light (U harn) B PIN -	RUF	5.5	5.0	splice2	Dinette o/h light (U harn) A PIN -	RUF	9.5	5.0	splice	16	wht	2C	14.0	521.04	
P3-1	GALLEY O/H B	P3 PIN 1	MAIN	0.0	0.0	F crimp	Galley o/h light (U harn) B PIN +	UAFT	.5	6.0	splice2	16	grn	2C	6.5	524.01	
P3-2	GALLEY O/H B	P3 PIN 2	MAIN	0.0	0.0	F crimp	Galley o/h light (U harn) B PIN -	UAFT	.5	6.0	splice2	16	wht	2C	6.5	524.02	
GALLEY O/H B	GALLEY O/H A	Galley o/h light (U harn) B PIN +	UAFT	.5	6.0	splice2	Galley o/h light (U harn) A PIN +	UFWD	2.5	6.0	splice2	16	grn	2C	15.0	524.03	
GALLEY O/H B	GALLEY O/H A	Galley o/h light (U harn) B PIN -	UAFT	.5	6.0	splice2	Galley o/h light (U harn) A PIN -	UFWD	2.5	6.0	splice2	16	wht	2C	15.0	524.04	
P30-3	GALLEY O/H A	P30 (SLS) PIN 3	MAIN	0.0	0.0	F crimp	Galley o/h light (SLS harn) A PIN +	UAFT	5.0	4.5	splice2	16	grn	2C	9.5	527.01	
P30-4	GALLEY O/H A	P30 (SLS) PIN 4	MAIN	0.0	0.0	F crimp	Galley o/h light (SLS harn) A PIN -	UAFT	5.0	4.5	splice2	16	wht	2C	9.5	527.02	
P8-3	GAL COVERD B	P8 PIN 3	MAIN	0.0	0.0	F crimp	Galley o/h light (sw) B PIN +	CROSS	6.0	4.0	splice2	16	grn	2C	10.0	528.01	Salon slideout only
P8-4	GAL COVERD B	P8 PIN 4	MAIN	0.0	0.0	F crimp	Galley o/h light (sw) B PIN -	CROSS	6.0	4.0	splice2	16	wht	2C	10.0	528.02	Salon slideout only
GAL COVERD B	GAL COVERD A	Galley o/h light (sw) B PIN +	CROSS	6.0	4.0	splice2	Galley o/h light (sw) A PIN +	CROSS	6.0	7.0	splice2	16	grn	2C	6.0	528.03	Salon slideout only
GAL COVERD B	GAL COVERD A	Galley o/h light (sw) B PIN -	CROSS	6.0	4.0	splice2	Galley o/h light (sw) A PIN -	CROSS	6.0	7.0	splice2	16	wht	2C	6.0	528.04	Salon slideout only
P30-7	WORK LIGHTS	P30 (SLS) PIN 7	MAIN	0.0	0.0	F crimp	Galley work lights PIN +	UAFT	2.0	4.0	splice	16	grn	2C	6.0	530.01	
P30-8	WORK LIGHTS	P30 (SLS) PIN 8	MAIN	0.0	0.0	F crimp	Galley work lights PIN -	UAFT	2.0	4.0	splice	16	wht	2C	6.0	530.02	
P3-3	BATH O/H A	P3 PIN 3	MAIN	0.0	0.0	F crimp	Bath o/h light A PIN +	RUA	3.0	6.0	splice2	16	grn	2C	9.0	533.01	
P3-4	BATH O/H A	P3 PIN 4	MAIN	0.0	0.0	F crimp	Bath o/h light A PIN -	RUA	3.0	6.0	splice2	16	wht	2C	9.0	533.02	
BATH O/H A	BATH O/H B	Bath o/h light A PIN +	RUA	3.0	6.0	splice2	Bath o/h light B PIN +	RUA	5.0	6.0	splice2	16	grn	2C	14.0	533.03	
BATH O/H A	BATH O/H B	Bath o/h light A PIN -	RUA	3.0	6.0	splice2	Bath o/h light B PIN -	RUA	5.0	6.0	splice2	16	wht	2C	14.0	533.04	
BATH O/H B	BATH O/H C	Bath o/h light B PIN +	RUA	5.0	6.0	splice2	Bath o/h light C PIN +	RUA	6.5	6.0	splice2	16	grn	2C	13.5	533.05	
BATH O/H B	BATH O/H C	Bath o/h light B PIN -	RUA	5.0	6.0	splice2	Bath o/h light C PIN -	RUA	6.5	6.0	splice2	16	wht	2C	13.5	533.06	
P3-11	PRIV LAV O/H	P3 PIN 11	MAIN	0.0	0.0	F crimp	Private lav overhead light PIN +	LUA	2.5	4.0	splice2	16	grn	2C	6.5	534.01	
P3-12	PRIV LAV O/H	P3 PIN 12	MAIN	0.0	0.0	F crimp	Private lav overhead light PIN -	LUA	2.5	4.0	splice2	16	wht	2C	6.5	534.02	
P4-5	SHOWER LIGHT	P4 PIN 5	MAIN	0.0	0.0	F crimp	Shower light PIN +	LUA	6.0	5.0	splice	16	grn	2C	11.0	539.01	
P4-6	SHOWER LIGHT	P4 PIN 6	MAIN	0.0	0.0	F crimp	Shower light PIN -	LUA	6.0	5.0	splice	16	wht	2C	11.0	539.02	
P3-5	STRM O/H A	P3 PIN 5	MAIN	0.0	0.0	F crimp	Strm right o/h light A PIN +	RUA	10.0	5.0	splice2	16	grn	2C	15.0	540.01	
P3-6	STRM O/H A	P3 PIN 6	MAIN	0.0	0.0	F crimp	Strm right o/h light A PIN -	RUA	10.0	5.0	splice2	16	wht	2C	15.0	540.02	
STRM O/H A	STRM O/H B	Strm right o/h light A PIN +	RUA	10.0	5.0	splice2	Strm right o/h light B PIN +	RUA	12.5	4.0	splice2	16	grn	2C	11.5	540.03	
STRM O/H A	STRM O/H B	Strm right o/h light A PIN -	RUA	10.0	5.0	splice2	Strm right o/h light B PIN -	RUA	12.5	4.0	splice2	16	wht	2C	11.5	540.04	
STRM O/H B	STRM O/H C	Strm right o/h light B PIN +	RUA	12.5	4.0	splice2	Strm right o/h light C PIN +	RUA	15.0	5.0	splice2	16	grn	2C	11.5	540.05	
STRM O/H B	STRM O/H C	Strm right o/h light B PIN -	RUA	12.5	4.0	splice2	Strm right o/h light C PIN -	RUA	15.0	5.0	splice2	16	wht	2C	11.5	540.06	
STRM O/H C	STRM O/H D	Strm right o/h light C PIN +	RUA	15.0	5.0	splice2	Strm right o/h light D PIN +	RUA	17.0	4.0	splice2	16	grn	2C	11.0	540.07	
STRM O/H C	STRM O/H D	Strm right o/h light C PIN -	RUA	15.0	5.0	splice2	Strm right o/h light D PIN -	RUA	17.0	4.0	splice2	16	wht	2C	11.0	540.08	
STRM O/H D	STRM O/H E	Strm right o/h light D PIN +	RUA	17.0	4.0	splice2	Strm right o/h light E PIN +	RUA	18.5	5.0	splice2	16	grn	2C	10.5	540.09	
STRM O/H D	STRM O/H E	Strm right o/h light D PIN -	RUA	17.0	4.0	splice2	Strm right o/h light E PIN -	RUA	18.5	5.0	splice2	16	wht	2C	10.5	540.10	
P8-11	O/H COVERD A	P8 PIN 11	MAIN	0.0	0.0	F crimp	Strm left o/h light (sw) A PIN +	RUA	10.0	9.0	splice2	16	grn	2C	19.0	541.01	Stateroom slideout only
P8-12	O/H COVERD A	P8 PIN 12	MAIN	0.0	0.0	F crimp	Strm left o/h light (sw) A PIN -	RUA	10.0	9.0	splice2	16	wht	2C	19.0	541.02	Stateroom slideout only
O/H COVERD A	O/H COVERD B	Strm left o/h light (sw) A PIN +	RUA	10.0	9.0	splice2	Strm left o/h light (sw) B PIN +	RUA	11.5	9.0	splice2	16	grn	2C	19.5	541.03	Stateroom slideout only
O/H COVERD A	O/H COVERD B	Strm left o/h light (sw) A PIN -	RUA	10.0	9.0	splice2	Strm left o/h light (sw) B PIN -	RUA	11.5	9.0	splice2	16	wht	2C	19.5	541.04	Stateroom slideout only
O/H COVERD B	O/H COVERD C	Strm left o/h light (sw) B PIN +	RUA	11.5	9.0	splice2	Strm left o/h light (sw) C PIN +	RUA	18.0	9.0	splice	16	grn	2C	24.5	541.05	Stateroom slideout only
O/H COVERD B	O/H COVERD C	Strm left o/h light (sw) B PIN -	RUA	11.5	9.0	splice2	Strm left o/h light (sw) C PIN -	RUA	18.0	9.0	splice	16	wht	2C	24.5	541.06	Stateroom slideout only
P25-1	J54-1	P25 PIN 1	MAIN	0.0	0.0	F crimp	J54 PIN 1	AFT	31.0	1.0	M crimp	16	grn	2C	32.0	542.01	Stateroom left overhead
P25-2	J54-2	P25 PIN 2	MAIN	0.0	0.0	F crimp	J54 PIN 2	AFT	31.0	1.0	M crimp	16	wht	2C	32.0	542.02	Stateroom left overhead
P25-7	J54-7	P25 PIN 7	MAIN	0.0	0.0	F crimp	J54 PIN 7	AFT	31.0	1.0	M crimp	16	grn	2C	32.0	544.03	Stateroom left DC sconce

WIRE LABEL LINE 1	LINE 2	FROM LOCATION	Branch	Run	Offset	Term	TO LOCATION	Branch	Run	Offset	Term	WIRE AWG	Color	Type	Length	Wire #	Notes
P25-8	J54-8	P25 PIN 8	MAIN	0.0	0.0	F crimp	J54 PIN 8	AFT	31.0	1.0	M crimp	16	wht	2C	32.0	544.04	Stateroom left DC sconce
P26-9	J55-9	P26 PIN 9	MAIN	0.0	0.0	F crimp	J55 PIN 9	AFT	31.0	1.0	M crimp	16	grn	2C	32.0	548.01	Under S/O lights (SRL)
P26-10	J55-10	P26 PIN 10	MAIN	0.0	0.0	F crimp	J55 PIN 10	AFT	31.0	1.0	M crimp	16	wht	2C	32.0	548.02	Under S/O lights (SRL)
P55-9	UNDER S/O LT	P55 PIN 9	MAIN	0.0	0.0	F crimp	Under S/O lights (SRL) PIN +	LFWD	2.0	3.0	splice	16	grn	2C	5.0	548.03	Under S/O lights (SRL)
P55-10	UNDER S/O LT	P55 PIN 10	MAIN	0.0	0.0	F crimp	Under S/O lights (SRL) PIN -	LFWD	2.0	3.0	splice	16	wht	2C	5.0	548.04	Under S/O lights (SRL)
P5-3	STRM VANITY	P5 PIN 3	MAIN	0.0	0.0	F crimp	Strm DC vanity light PIN +	RUA	10.5	3.0	splice	16	grn	2C	13.5	548.05	Stateroom DC vanity light
P5-4	STRM VANITY	P5 PIN 4	MAIN	0.0	0.0	F crimp	Strm DC vanity light PIN -	RUA	10.5	3.0	splice	16	wht	2C	13.5	548.06	Stateroom DC vanity light
P25-3	J54-3	P25 PIN 3	MAIN	0.0	0.0	F crimp	J54 PIN 3	AFT	31.0	1.0	M crimp	16	grn	2C	32.0	550.01	Single window 1
P25-4	J54-4	P25 PIN 4	MAIN	0.0	0.0	F crimp	J54 PIN 4	AFT	31.0	1.0	M crimp	16	wht	2C	32.0	550.02	Single window 1
P54-3	ACC 1AFT	P54 PIN 3	MAIN	0.0	0.0	F crimp	Accent light 1aft PIN +	UPPER	1.0	5.0	splice	16	grn	2C	6.0	550.03	Single window 1
P54-4	ACC 1AFT	P54 PIN 4	MAIN	0.0	0.0	F crimp	Accent light 1aft PIN -	UPPER	1.0	5.0	splice	16	wht	2C	6.0	550.04	Single window 1
ACC 1AFT	ACC 1FWD	Accent light 1aft PIN +	UPPER	1.0	5.0	splice	Accent light 1fwd PIN +	UPPER	6.0	5.0	splice	16	grn	2C	15.0	550.05	Single window 1
ACC 1AFT	ACC 1FWD	Accent light 1aft PIN -	UPPER	1.0	5.0	splice	Accent light 1fwd PIN -	UPPER	6.0	5.0	splice	16	wht	2C	15.0	550.06	Single window 1
P29-3	ACC 2AF3BA	P29 (SLS harn) PIN 3	MAIN	0.0	0.0	F crimp	Accent light 2Afwd/3Baft PIN +	UAFT	0.0	5.0	splice3	14	grn	2C	5.0	555.01	Windows 2A/B,3A/B slideout
P29-4	ACC 2AF3BA	P29 (SLS harn) PIN 4	MAIN	0.0	0.0	F crimp	Accent light 2Afwd/3Baft PIN -	UAFT	0.0	5.0	splice3	14	wht	2C	5.0	555.02	Windows 2A/B,3A/B slideout
ACC 2AF3BA	ACC 2AA2BL	Accent light 2Afwd/3Baft PIN +	UAFT	0.0	5.0	splice3	Accent light 2Aaft/2Blft PIN +	UAFT	6.5	5.0	splice2	16	grn	2C	16.5	555.03	Windows 2A/B,3A/B slideout
ACC 2AF3BA	ACC 2AA2BL	Accent light 2Afwd/3Baft PIN -	UAFT	0.0	5.0	splice3	Accent light 2Aaft/2Blft PIN -	UAFT	6.5	5.0	splice2	16	wht	2C	16.5	555.04	Windows 2A/B,3A/B slideout
ACC 2AA2BL	ACC 2BRGT	Accent light 2Aaft/2Blft PIN +	UAFT	6.5	5.0	splice2	Accent light 2Brgt PIN +	UAFT	8.5	5.0	splice	16	grn	2C	12.0	555.05	Windows 2A/B,3A/B slideout
ACC 2AA2BL	ACC 2BRGT	Accent light 2Aaft/2Blft PIN -	UAFT	6.5	5.0	splice2	Accent light 2Brgt PIN -	UAFT	8.5	5.0	splice	16	wht	2C	12.0	555.06	Windows 2A/B,3A/B slideout
ACC 2AF3BA	ACC 3AL3BF	Accent light 2Afwd/3Baft PIN +	UAFT	0.0	5.0	splice3	Accent light 3Alft/3Bfwd PIN +	UFWD	6.5	5.0	splice2	16	grn	2C	16.5	555.07	Windows 2A/B,3A/B slideout
ACC 2AF3BA	ACC 3AL3BF	Accent light 2Afwd/3Baft PIN -	UAFT	0.0	5.0	splice3	Accent light 3Alft/3Bfwd PIN -	UFWD	6.5	5.0	splice2	16	wht	2C	16.5	555.08	Windows 2A/B,3A/B slideout
ACC 3AL3BF	ACC 3ARGT	Accent light 3Alft/3Bfwd PIN +	UFWD	6.5	5.0	splice2	Accent light 3Argt PIN +	UFWD	8.5	5.0	splice	16	grn	2C	12.0	555.09	Windows 2A/B,3A/B slideout
ACC 3AL3BF	ACC 3ARGT	Accent light 3Alft/3Bfwd PIN -	UFWD	6.5	5.0	splice2	Accent light 3Argt PIN -	UFWD	8.5	5.0	splice	16	wht	2C	12.0	555.10	Windows 2A/B,3A/B slideout
P4-1	ACC 14AFT	P4 PIN 1	MAIN	0.0	0.0	F crimp	Accent light 14aft PIN +	RUF	1.5	5.0	splice2	14	grn	1C	6.5	559.01	Windows 12,13,14
P4-2	ACC 14AFT	P4 PIN 2	MAIN	0.0	0.0	F crimp	Accent light 14aft PIN -	RUF	1.5	5.0	splice2	14	wht	1C	6.5	559.02	Windows 12,13,14
ACC 14AFT	ACC 13A14F	Accent light 14aft PIN +	RUF	1.5	5.0	splice2	Accent light 13aft/14fwd PIN +	RUF	5.0	5.0	splice2	16	grn	2C	13.5	559.03	Windows 12,13,14
ACC 14AFT	ACC 13A14F	Accent light 14aft PIN -	RUF	1.5	5.0	splice2	Accent light 13aft/14fwd PIN -	RUF	5.0	5.0	splice2	16	wht	2C	13.5	559.04	Windows 12,13,14
ACC 13A14F	ACC 12A13F	Accent light 13aft/14fwd PIN +	RUF	5.0	5.0	splice2	Accent light 12aft/13fwd PIN +	RUF	10.0	5.0	splice2	16	grn	2C	15.0	559.05	Windows 12,13,14
ACC 13A14F	ACC 12A13F	Accent light 13aft/14fwd PIN -	RUF	5.0	5.0	splice2	Accent light 12aft/13fwd PIN -	RUF	10.0	5.0	splice2	16	wht	2C	15.0	559.06	Windows 12,13,14
ACC 12A13F	ACC 12FWD	Accent light 12aft/13fwd PIN +	RUF	10.0	5.0	splice2	Accent light 12fwd PIN +	RUF	16.0	5.0	splice	16	grn	2C	16.0	559.07	Windows 12,13,14
ACC 12A13F	ACC 12FWD	Accent light 12aft/13fwd PIN -	RUF	10.0	5.0	splice2	Accent light 12fwd PIN -	RUF	16.0	5.0	splice	16	wht	2C	16.0	559.08	Windows 12,13,14
P4-3	ACC 15FWD	P4 PIN 3	MAIN	0.0	0.0	F crimp	Accent light 15fwd PIN +	RUA	12.5	5.0	splice2	16	grn	2C	17.5	567.01	Single window 15
P4-4	ACC 15FWD	P4 PIN 4	MAIN	0.0	0.0	F crimp	Accent light 15fwd PIN -	RUA	12.5	5.0	splice2	16	wht	2C	17.5	567.02	Single window 15
ACC 15FWD	ACC 15AFT	Accent light 15fwd PIN +	RUA	12.5	5.0	splice2	Accent light 15aft PIN +	RUA	18.5	5.0	splice	16	grn	2C	16.0	567.03	Single window 15
ACC 15FWD	ACC 15AFT	Accent light 15fwd PIN -	RUA	12.5	5.0	splice2	Accent light 15aft PIN -	RUA	18.5	5.0	splice	16	wht	2C	16.0	567.04	Single window 15
P14-15	DOOR SWITCH	P14 PIN 15	MAIN	0.0	0.0	F crimp	Door switch	DASH	10.0	2.0	F faston	18	blk	1C	12.0	580.01	Entry door circuit
PREVST CB130	DOOR OV FUSE	Prevost breaker CB130 PIN LINE	LOWER	2.0	3.0	#8 rlug	F2 PIN LINE	LOWER	2.0	3.0	splice	18	red	1C	3.0	580.02	Entry door circuit
P16-15	DOOR OV FUSE	P16 PIN 15	MAIN	0.0	0.0	F crimp	F2 PIN LOAD	LOWER	2.0	3.0	splice	18	red	1C	5.0	580.03	Entry door circuit
P14-5	EXT ENTRY LT	P14 PIN 5	MAIN	0.0	0.0	F crimp	Exterior entry light PIN +	UPPER	8.0	5.0	splice	16	red	2C	13.0	593.01	Exterior entry light
P14-6	EXT ENTRY LT	P14 PIN 6	MAIN	0.0	0.0	F crimp	Exterior entry light PIN -	UPPER	8.0	5.0	splice	16	blk	2C	13.0	593.02	Exterior entry light
P27-3	EXT LGT FWD	P27 PIN 3	MAIN	0.0	0.0	F crimp	Exterior light left fwd (RT) PIN +	FWD	2.0	10.0	splice	16	red	2C	12.0	594.01	
P27-4	EXT LGT FWD	P27 PIN 4	MAIN	0.0	0.0	F crimp	Exterior light left fwd (RT) PIN -	FWD	2.0	10.0	splice	16	blk	2C	12.0	594.02	
EXT LGT FWD	EXT LGT MID	Exterior light left fwd (RT) PIN +	FWD	2.0	10.0	splice	Exterior light left mid (RT) PIN +	AFT	8.0	10.0	splice	16	red	2C	30.0	594.03	
EXT LGT FWD	EXT LGT MID	Exterior light left fwd (RT) PIN -	FWD	2.0	10.0	splice	Exterior light left mid (RT) PIN -	AFT	8.0	10.0	splice	16	blk	2C	30.0	594.04	
EXT LGT MID	EXT LGT AFT	Exterior light left mid (RT) PIN +	AFT	8.0	10.0	splice	Exterior light left aft (RT) PIN +	AFT	17.0	10.0	splice	16	red	2C	29.0	594.05	
EXT LGT MID	EXT LGT AFT	Exterior light left mid (RT) PIN -	AFT	8.0	10.0	splice	Exterior light left aft (RT) PIN -	AFT	17.0	10.0	splice	16	blk	2C	29.0	594.06	
P22-1	EXT LGT FWD	P22 PIN 1	MAIN	0.0	0.0	F crimp	Exterior light right fwd (CT) PIN +	FWD	2.0	10.0	splice	16	red	2C	12.0	595.01	
P22-2	EXT LGT FWD	P22 PIN 2	MAIN	0.0	0.0	F crimp	Exterior light right fwd (CT) PIN -	FWD	2.0	10.0	splice	16	blk	2C	12.0	595.02	
EXT LGT FWD	EXT LGT MID	Exterior light right fwd (CT) PIN +	FWD	2.0	10.0	splice	Exterior light right mid (CT) PIN +	AFT	8.0	10.0	splice	16	red	2C	30.0	595.03	
EXT LGT FWD	EXT LGT MID	Exterior light right fwd (CT) PIN -	FWD	2.0	10.0	splice	Exterior light right mid (CT) PIN -	AFT	8.0	10.0	splice	16	blk	2C	30.0	595.04	
EXT LGT MID	EXT LGT AFT	Exterior light right mid (CT) PIN +	AFT	8.0	10.0	splice	Exterior light right aft (CT) PIN +	AFT	17.0	10.0	splice	16	red	2C	29.0	595.05	
EXT LGT MID	EXT LGT AFT	Exterior light right mid (CT) PIN -	AFT	8.0	10.0	splice	Exterior light right aft (CT) PIN -	AFT	17.0	10.0	splice	16	blk	2C	29.0	595.06	
P17-3	WORK LT SW	P17 PIN 3	MAIN	0.0	0.0	F crimp	Rear work light switch PIN LINE	DASH	8.0	4.0	F faston	16	grn	2C	12.0	598.01	
P17-4	WORK LT SW	P17 PIN 4	MAIN	0.0	0.0	F crimp	Rear work light switch PIN SPLICE	DASH	8.0	4.0	splice	16	wht	2C	12.0	598.02	
WORK LT SW	J60 U HARN-1	Rear work light switch PIN LOAD	DASH	8.0	4.0	F faston	J60 PIN 1	MAIN	0.0	2.0	M crimp	16	grn	2C	14.0	598.03	
WORK LT SW	J60 U HARN-2	Rear work light switch PIN SPLICE	DASH	8.0	4.0	splice	J60 PIN 2	MAIN	0.0	2.0	M crimp	16	wht	2C	14.0	598.04	
P60 F HARN-1	REAR WK LT A	P60 PIN 1	MAIN	0.0	2.0	F crimp	Rear work light A (U) PIN +	RUA	23.0	20.0	splice2	16	grn	2C	45.0	598.05	
P60 F HARN-2	REAR WK LT A	P60 PIN 2	MAIN	0.0	2.0	F crimp	Rear work light A (U) PIN -	RUA	23.0	20.0	splice2	16	wht	2C	45.0	598.06	
P17-9	DSP12-	P17 PIN 9	MAIN	0.0	0.0	F crimp	DSP12	DASH	10.0	2.0	F fast2	16	red	2C	12.0	601.01	Dash switch power
P17-10	DSPGND-	P17 PIN 10	MAIN	0.0	0.0	F crimp	DSPGND	DASH	10.0	2.0	F faston	16	blk	2C	12.0	601.02	Dash switch ground
P14-11	PRESSURE SW	P14 PIN 11	MAIN	0.0	0.0	F crimp	Pressure switch PIN +	LOWER	2.0	4.0	splice	16	blu	2C	6.0	610.01	

WIRE LABEL LINE 1	LINE 2	FROM LOCATION	Branch	Run	Offset	Term	TO LOCATION	Branch	Run	Offset	Term	WIRE AWG	Color	Type	Length	Wire #	Notes
P14-12	PRESSURE SW	P14 PIN 12	MAIN	0.0	0.0	F crimp	Pressure switch PIN -	LOWER	2.0	4.0	splice	16	blk	2C	6.0	610.02	
P15-1	AIR SLIDE	P15 PIN 1	MAIN	0.0	0.0	F crimp	Air slide PIN +	LOWER	2.0	6.0	splice	12	blu	1C	8.0	612.01	
P15-2	AIR SLIDE	P15 PIN 2	MAIN	0.0	0.0	F crimp	Air slide PIN -	LOWER	2.0	6.0	splice	12	blk	1C	8.0	612.02	
P15-3	PR 0-285-18	P15 PIN 3	MAIN	0.0	0.0	F crimp	Prevost wire 0-285-18	LOWER	2.5	3.0	splice	16	gry	1C	5.5	616.01	Bay door lock
P15-4	PR 0-284A-18	P15 PIN 4	MAIN	0.0	0.0	F crimp	Prevost wire 0-284A-18	LOWER	2.5	3.0	splice	16	gry	1C	5.5	616.02	Bay door unlock
P15-15	CHASSIS GND	P15 PIN 15	MAIN	0.0	0.0	F crimp	Prevost left chassis	LOWER	2.5	3.0	#8 lug	16	blk	1C	5.5	616.03	Bay door lock com
P15-13	PR 0-170-J18	P15 PIN 13	MAIN	0.0	0.0	F crimp	Prevost wire 0-170-J18	LOWER	2.5	3.0	splice	16	gry	1C	5.5	617.01	Front door lock
P15-14	PR 0-285A-18	P15 PIN 14	MAIN	0.0	0.0	F crimp	Prevost wire 0-285A-18	LOWER	2.5	3.0	splice	16	gry	1C	5.5	617.02	Front door unlock
P17-1	J902 LIFT BX	P17 PIN 1	MAIN	0.0	0.0	F crimp	J902 PIN 1	UPPER	8.0	4.0	M crimp	14	yel	1C	12.0	618.01	If TV lift
P17-2	J902 LIFT BX	P17 PIN 2	MAIN	0.0	0.0	F crimp	J902 PIN 3	UPPER	8.0	4.0	M crimp	14	blk	1C	12.0	618.02	If TV lift
P17-7	J902 LIFT BX	P17 PIN 7	MAIN	0.0	0.0	F crimp	J902 PIN 2	UPPER	8.0	4.0	M crimp	16	red	1C	12.0	618.03	If TV lift
TV LIFT SW	J902 LIFT BX	TV lift switch PIN WIPER1	UPPER	8.0	18.0	F faston	J902 PIN 4/9	UPPER	8.0	4.0	M crimp	18	blk	C6	17.0	618.04	See 9060022 If TV lift
P11-7	DOORBELL	P11 PIN 7	MAIN	0.0	0.0	F crimp	Doorbell PIN +	RLF	19.0	2.0	#8 lug	16	red	2C	21.0	622.01	
P11-8	DOORBELL	P11 PIN 8	MAIN	0.0	0.0	F crimp	Doorbell PIN -	RLF	19.0	2.0	#8 lug	16	blk	2C	21.0	622.02	
P7-7	PRIV SHADE	P7 PIN 7	MAIN	0.0	0.0	F crimp	Privacy shade PIN +	LUA	8.0	5.0	splice	16	red	2C	13.0	625.01	
P7-8	PRIV SHADE	P7 PIN 8	MAIN	0.0	0.0	F crimp	Privacy shade PIN -	LUA	8.0	5.0	splice	16	blk	2C	13.0	625.02	
P5-5	BUDDY SEAT	P5 PIN 5	MAIN	0.0	0.0	F crimp	Buddy seat	RLF	18.0	2.0	splice	10	red	1C	20.0	626.01	
P5-6	BUDDY SEAT	P5 PIN 6	MAIN	0.0	0.0	F crimp	Buddy seat	RLF	18.0	2.0	splice	10	blk	1C	20.0	626.02	
P22-12	AUX H20 PUMP	P22 PIN 12	MAIN	0.0	0.0	F crimp	Aux water pump PIN +	AFT	17.0	6.0	splice	16	org	2C	23.0	627.01	Optional
P22-13	AUX H20 PUMP	P22 PIN 13	MAIN	0.0	0.0	F crimp	Aux water pump PIN -	AFT	17.0	6.0	splice	16	blk	2C	23.0	627.02	Optional
ANEMOMETER	AWNING CTRLR	Anemometer PIN 3	UPPER	4.0	7.0	F crimp	Awning controller (F) PIN ANEM+	MAIN	2.0	10.0	splice	16	red	2C	23.0	628.01	Anemometer signal
ANEMOMETER	AWNING CTRLR	Anemometer PIN 4	UPPER	4.0	7.0	F crimp	Awning controller (F) PIN ANEM-	MAIN	2.0	10.0	splice	16	blk	2C	23.0	628.02	Anemometer signal
P5-11	DOOR TB1	P5 PIN 11	MAIN	0.0	0.0	F crimp	Electric door TB1	RLA	5.0	6.0	#8 lug	10	red	1C	11.0	631.01	See 9060053
P5-12	DOOR TB1	P5 PIN 12	MAIN	0.0	0.0	F crimp	Electric door TB1	RLA	5.0	6.0	#8 lug	10	blk	1C	11.0	631.02	See 9060053
P5-13	DOOR TB1	P5 PIN 13	MAIN	0.0	0.0	F crimp	Electric door TB1	RLA	5.0	6.0	#8 lug	16	red	2C	11.0	631.03	See 9060053 panel lights
P5-14	DOOR TB1	P5 PIN 14	MAIN	0.0	0.0	F crimp	Electric door TB1	RLA	5.0	6.0	#8 lug	16	blk	2C	11.0	631.04	See 9060053 panel lights
DOOR TB1	J361 DA SA-	Electric door TB1	RLA	5.0	6.0	#8 lug	J361	LUA	1.0	8.0	M crimp	18	-	6C	20.0	631.06	See 9060053 - door A sw A
DOOR TB1	J362 DA SB-	Electric door TB1	RLA	5.0	6.0	#8 lug	J362	LUA	2.0	8.0	M crimp	18	-	6C	21.0	631.07	See 9060053 - door A sw B
P360 DR CTRL	DOOR A	P360 PIN WHT	RLA	5.0	6.0	splice	Electric door motor A PIN +	RLF	1.0	6.0	splice	12	red	2C	18.0	631.10	
P360 DR CTRL	DOOR A	P360 PIN YEL	RLA	5.0	6.0	splice	Electric door motor A PIN -	RLF	1.0	6.0	splice	12	blk	2C	18.0	631.11	
P6-TBD	SPARE DR AA	P6 PIN TBD	MAIN	0.0	0.0	F crimp	Electric door spare 1 PIN TBD	LUA	1.0	8.0	pigtail	18	-	6C	9.0	631.12	Spare - door A switch A
P6-TBD	SPARE DR AB	P6 PIN TBD	MAIN	0.0	0.0	F crimp	Electric door spare 2 PIN TBD	LUA	2.0	8.0	pigtail	18	-	6C	10.0	631.13	Spare - door A switch B
DOOR TB1	J363 DB SA-	Electric door TB1	RLA	5.0	6.0	#8 lug	J363	LUA	2.0	8.0	M crimp	18	-	6C	21.0	632.01	See 9060053 - door B sw A
DOOR TB1	J364 DB SB-	Electric door TB1	RLA	5.0	6.0	#8 lug	J364	RLA	8.5	8.0	M crimp	18	-	6C	17.5	632.02	See 9060053 - door B sw B
P360 DR CTRL	DOOR B	P360 PIN WHT/ST	RLA	5.0	6.0	splice	Electric door motor B PIN +	RLA	5.0	6.0	splice	12	red	2C	3.0	632.05	
P360 DR CTRL	DOOR B	P360 PIN YEL/ST	RLA	5.0	6.0	splice	Electric door motor B PIN -	RLA	5.0	6.0	splice	12	blk	2C	3.0	632.06	
P5-TBD	SPARE DR B	P5 PIN TBD	MAIN	0.0	0.0	F crimp	Electric door spare 3 PIN TBD	RLA	5.0	6.0	pigtail	10	red	1C	11.0	632.07	Spare - door motor B
P5-TBD	SPARE DR B	P5 PIN TBD	MAIN	0.0	0.0	F crimp	Electric door spare 3 PIN TBD	RLA	5.0	6.0	pigtail	10	blk	1C	11.0	632.08	Spare - door motor B
P11-TBD	SPARE DR BA	P11 PIN TBD	MAIN	0.0	0.0	F crimp	Electric door spare 4 PIN TBD	LUA	2.0	8.0	pigtail	18	-	6C	10.0	632.09	Spare - door B switch A
P11-TBD	SPARE DR BB	P11 PIN TBD	MAIN	0.0	0.0	F crimp	Electric door spare 5 PIN TBD	RLA	8.5	8.0	pigtail	18	-	6C	16.5	632.10	Spare - door B switch B
P21-7	CABLE MASTER	P21 PIN 7	MAIN	0.0	0.0	F crimp	Glendinning PIN +	AFT	17.0	9.0	pigtail	10	red	1C	26.0	636.01	
P21-8	CABLE MASTER	P21 PIN 8	MAIN	0.0	0.0	F crimp	Glendinning PIN -	AFT	17.0	9.0	pigtail	10	blk	1C	26.0	636.02	
P21-9	CABLE REMOTE	P21 PIN 9	MAIN	0.0	0.0	F crimp	Glendinning remote PIN +	AFT	17.0	9.0	pigtail	16	red	2C	26.0	636.03	
P21-10	CABLE REMOTE	P21 PIN 10	MAIN	0.0	0.0	F crimp	Glendinning remote PIN -	AFT	17.0	9.0	pigtail	16	blk	2C	26.0	636.04	
P22-14	J904 COLOR-1	P22 PIN 14	MAIN	0.0	0.0	F crimp	J904 PIN 1	FWD	4.0	4.0	pigtail	16	red	2C	8.0	638.01	Color wheel
P22-15	J904 COLOR-2	P22 PIN 15	MAIN	0.0	0.0	F crimp	J904 PIN 2	FWD	4.0	4.0	pigtail	16	blk	2C	8.0	638.02	Color wheel
P16-1	RADAR DETECT	P16 PIN 1	MAIN	0.0	0.0	F crimp	Radar detector PIN +	DASH	8.0	2.5	pigtail	16	red	2C	10.5	639.01	
P16-2	RADAR DETECT	P16 PIN 2	MAIN	0.0	0.0	F crimp	Radar detector PIN -	DASH	8.0	2.5	pigtail	16	blk	2C	10.5	639.02	
P29-7	J933 L SOFA-	P29 (SLS harn) PIN 7	MAIN	0.0	0.0	F crimp	J933 (SLS) PIN 3	LFWD	3.0	4.0	M crimp	10	red	1C	7.0	643.01	Salon left sofa-slideout
P29-8	J933 L SOFA-	P29 (SLS harn) PIN 8	MAIN	0.0	0.0	F crimp	J933 (SLS) PIN 2	LFWD	3.0	4.0	M crimp2	10	blk	1C	7.0	643.02	Salon left sofa-slideout
P16-7	12V ACCESSY	P16 PIN 7	MAIN	0.0	0.0	F crimp	12V accessory jack (F) PIN +	MAIN	14.0	6.0	F faston	16	red	2C	20.0	646.01	
P16-8	12V ACCESSY	P16 PIN 8	MAIN	0.0	0.0	F crimp	12V accessory jack (F) PIN -	MAIN	14.0	6.0	F faston	16	blk	2C	20.0	646.02	
P25-11	J54-11	P25 PIN 11	MAIN	0.0	0.0	F crimp	J54 PIN 11	AFT	31.0	1.0	M crimp	16	red	2C	32.0	649.01	NONSLIDE Left bed-Air bed lift
P25-12	J54-12	P25 PIN 12	MAIN	0.0	0.0	F crimp	J54 PIN 12	AFT	31.0	1.0	M crimp	16	blk	2C	32.0	649.02	NONSLIDE Left bed-Air bed lift
P6-7	INTERCOM B1	P6 PIN 7	MAIN	0.0	0.0	F crimp	Intercom base 1 PIN +	LLA	17.0	20.0	pigtail	16	blu	2C	37.0	650.01	Audio intercom only

WIRE LABEL LINE 1	LINE 2	FROM LOCATION	Branch	Run	Offset	Term	TO LOCATION	Branch	Run	Offset	Term	WIRE AWG	Color	Type	Length	Wire #	Notes
P6-8	INTERCOM B1	P6 PIN 8	MAIN	0.0	0.0	F crimp	Intercom base 1 PIN -	LLA	17.0	20.0	pigtail	16	blk	2C	37.0	650.02	Audio intercom only
INTERCOM B1	INTERCOM REM	Intercom base 1 PIN 3	LLA	17.0	20.0	pigtail	Intercom remote PIN 1	RLF	19.0	6.0	pigtail	16	blu	2C	62.0	650.03	
INTERCOM B1	INTERCOM REM	Intercom base 1 PIN E	LLA	17.0	20.0	pigtail	Intercom remote PIN E	RLF	19.0	6.0	pigtail	16	blk	2C	62.0	650.04	
INTERCOM B1	INTERCOM B2	Intercom base 1 PIN 1	LLA	17.0	20.0	pigtail	Intercom base 2 PIN 1	RUF	20.0	10.0	pigtail	16	blu	2C	67.0	650.05	If two base units
INTERCOM B1	INTERCOM B2	Intercom base 1 PIN E	LLA	17.0	20.0	pigtail	Intercom base 2 PIN E	RUF	20.0	10.0	pigtail	16	blk	2C	67.0	650.06	If two base units
P370-1	P16-9	P370 PIN 1	DASH	8.0	3.0	F crimp2	P16 PIN 9	MAIN	0.0	0.0	F crimp	16	blu	2C	11.0	651.01	From Prevost C360
B/U CAMERA	J208-	Backup camera PIN PWR	RUA	23.0	3.0	splice2	J208	RUA	23.0	20.0	pigtail	16	blu	2C	20.0	653.03	H3 only
B/U CAMERA	J208-	Backup camera PIN GND	RUA	23.0	3.0	splice2	J208	RUA	23.0	20.0	pigtail	16	blk	2C	20.0	653.04	H3 only
P15-11	CB RADIO	P15 PIN 11	MAIN	0.0	0.0	F crimp	Driver's CB PIN +	LOWER	2.0	4.0	splice	16	blu	2C	6.0	667.01	
P15-12	CB RADIO	P15 PIN 12	MAIN	0.0	0.0	F crimp	Driver's CB PIN -	LOWER	2.0	4.0	splice	16	blk	2C	6.0	667.02	
P11-9	ANT CONTRLLR	P11 PIN 9	MAIN	0.0	0.0	F crimp	Antenna controller PIN +	RLF	13.0	5.0	splice	16	blu	2C	18.0	670.01	Salon occasional table
P11-10	ANT CONTRLLR	P11 PIN 10	MAIN	0.0	0.0	F crimp	Antenna controller PIN -	RLF	13.0	5.0	splice	16	blk	2C	18.0	670.02	Salon occasional table
P17-13	A ALM BUZZER	P17 PIN 13	MAIN	0.0	0.0	F crimp	Antenna alarm buzzer PIN +	LOWER	2.0	4.0	#8 lug	16	blu	2C	6.0	672.01	
P17-14	A ALM BUZZER	P17 PIN 14	MAIN	0.0	0.0	F crimp	Antenna alarm buzzer PIN -	LOWER	2.0	4.0	#8 lug	16	blk	2C	6.0	672.02	
P7-13	SAT ANT FEED	P7 PIN 13	MAIN	0.0	0.0	F crimp	Satellite antenna feed PIN +	RUA	21.0	5.0	F faston	16	red	1C	26.0	673.01	near satellite receiver
P7-14	SAT ANT FEED	P7 PIN 14	MAIN	0.0	0.0	F crimp	Satellite antenna feed PIN -	RUA	21.0	5.0	F faston	16	blk	1C	26.0	673.02	near satellite receiver
P15-5	SAT ANT SW	P15 PIN 5	MAIN	0.0	0.0	F crimp	Satellite antenna sw PIN +	DASH	8.0	2.5	F faston	18	red	1C	10.5	674.01	Switch at dash
P15-6	SAT ANT SW	P15 PIN 6	MAIN	0.0	0.0	F crimp	Satellite antenna sw PIN -	DASH	8.0	2.5	F faston	18	red	1C	10.5	674.02	Switch at dash
P23-1	BAY RADIO SU	P23 PIN 1	MAIN	0.0	0.0	F crimp	Bay stereo power sup. PIN +	AFT	4.0	10.0	F faston	16	red	2C	14.0	676.01	Bay 2R ceiling
P23-2	BAY RADIO SU	P23 PIN 2	MAIN	0.0	0.0	F crimp	Bay stereo power sup. PIN -	AFT	4.0	10.0	F faston	16	red	2C	14.0	676.02	Bay 2R ceiling
P1-11	VCS-	P1 PIN 11	MAIN	0.0	0.0	F crimp	VCS	RUA	22.0	12.0	pigtail	22	r/bk	12C	34.0	680.01	Sal right VCS trigger
P1-12	VCS-	P1 PIN 12	MAIN	0.0	0.0	F crimp	VCS	RUA	22.0	12.0	pigtail	22	g/bk	12C	34.0	680.02	Lights master VCS trigger
P1-13	VCS-	P1 PIN 13	MAIN	0.0	0.0	F crimp	VCS	RUA	22.0	12.0	pigtail	22	bl/b	12C	34.0	680.03	Panel lights VCS trigger
P1-14	VCS-	P1 PIN 14	MAIN	0.0	0.0	F crimp	VCS	RUA	22.0	12.0	pigtail	22	w/bk	12C	34.0	680.04	Front door lock VCS trigger
P2-10	VCS-	P2 PIN 10	MAIN	0.0	0.0	F crimp	VCS	RUA	22.0	12.0	pigtail	22	red	12C	34.0	680.05	VCS breaker feed
P2-11	VCS-	P2 PIN 11	MAIN	0.0	0.0	F crimp	VCS	RUA	22.0	12.0	pigtail	22	blk	12C	34.0	680.06	VCS ground feed
P2-12	VCS-	P2 PIN 12	MAIN	0.0	0.0	F crimp	VCS	RUA	22.0	12.0	pigtail	22	org	12C	34.0	680.07	Shade Master VCS trigger
P2-13	VCS-	P2 PIN 13	MAIN	0.0	0.0	F crimp	VCS	RUA	22.0	12.0	pigtail	22	grn	12C	34.0	680.08	Strm o/h lights VCS trigger
P2-14	VCS-	P2 PIN 14	MAIN	0.0	0.0	F crimp	VCS	RUA	22.0	12.0	pigtail	22	blu	12C	34.0	680.09	Front door unlock VCS trigger
P2-15	VCS-	P2 PIN 15	MAIN	0.0	0.0	F crimp	VCS	RUA	22.0	12.0	pigtail	22	wht	12C	34.0	680.10	Salon left o/h lights VCS trig
P29-5	SALON TB3	P29 (SLS harn) PIN 5	MAIN	0.0	0.0	F crimp	Sal left aft TB3 (SLS harn) PIN +	UAFT	3.0	5.0	#8 lug	16	red	2C	8.0	700.03	Slideout only
P29-6	SALON TB3	P29 (SLS harn) PIN 6	MAIN	0.0	0.0	F crimp	Sal left aft TB3 (SLS harn) PIN -	UAFT	3.0	5.0	#8 lug	16	blk	2C	8.0	700.04	Slideout only
SALON TB3	SALON TB1	Sal left aft TB3 (SLS harn) PIN +	UAFT	3.0	5.0	#8 lug	Sal left fwd TB1 (SLS harn) PIN +	LFWD	3.0	5.0	#8 lug	16	red	2C	16.0	701.03	Slideout only
SALON TB3	SALON TB1	Sal left aft TB3 (SLS harn) PIN -	UAFT	3.0	5.0	#8 lug	Sal left fwd TB1 (SLS harn) PIN -	LFWD	3.0	5.0	#8 lug	16	blk	2C	16.0	701.04	Slideout only
P4-9	SALON TB4	P4 PIN 9	MAIN	0.0	0.0	F crimp	Sal right aft TB4 (U harn) PIN +	RLF	7.0	5.0	#8 lug	16	red	2C	12.0	702.01	
P4-10	SALON TB4	P4 PIN 10	MAIN	0.0	0.0	F crimp	Sal right aft TB4 (U harn) PIN -	RLF	7.0	5.0	#8 lug	16	blk	2C	12.0	702.02	
SALON TB4	SALON TB2	Sal right aft TB4 (U harn) PIN +	RLF	7.0	5.0	#8 lug	Sal right fwd TB2 (U harn) PIN +	RLF	13.0	5.0	#8 lug	16	red	2C	16.0	703.01	
SALON TB4	SALON TB2	Sal right aft TB4 (U harn) PIN -	RLF	7.0	5.0	#8 lug	Sal right fwd TB2 (U harn) PIN -	RLF	13.0	5.0	#8 lug	16	blk	2C	16.0	703.02	
P8-9	BATH TB1	P8 PIN 9	MAIN	0.0	0.0	F crimp	Bath left TB1 (U harn) PIN +	LLA	1.0	5.0	#8 lug	16	red	2C	6.0	707.01	
P8-10	BATH TB1	P8 PIN 10	MAIN	0.0	0.0	F crimp	Bath left TB1 (U harn) PIN -	LLA	1.0	5.0	#8 lug	16	blk	2C	6.0	707.02	
P25-5	J54-5	P25 PIN 5	MAIN	0.0	0.0	F crimp	J54 PIN 5	AFT	31.0	1.0	M crimp	16	red	2C	32.0	708.01	Stateroom TB3
P25-6	J54-6	P25 PIN 6	MAIN	0.0	0.0	F crimp	J54 PIN 6	AFT	31.0	1.0	M crimp	16	blk	2C	32.0	708.02	Stateroom TB3
P54-5	STRM TB3	P54 PIN 5	MAIN	0.0	0.0	F crimp	Strm left aft TB3 (SRL harn) PIN +	LOWER	1.0	5.0	#8 lug	16	red	2C	6.0	708.03	
P54-6	STRM TB3	P54 PIN 6	MAIN	0.0	0.0	F crimp	Strm left aft TB3 (SRL harn) PIN -	LOWER	1.0	5.0	#8 lug	16	blk	2C	6.0	708.04	
STRM TB3	STRM TB1	Strm left aft TB3 (SRL harn) PIN +	LOWER	1.0	5.0	#8 lug	Strm left fwd TB1 (SRL harn) PIN +	LOWER	7.5	3.0	#8 lug	16	red	2C	14.5	709.01	
STRM TB3	STRM TB1	Strm left aft TB3 (SRL harn) PIN -	LOWER	1.0	5.0	#8 lug	Strm left fwd TB1 (SRL harn) PIN -	LOWER	7.5	3.0	#8 lug	16	blk	2C	14.5	709.02	
P4-13	STRM TB2	P4 PIN 13	MAIN	0.0	0.0	F crimp	Strm right fwd TB2 (U harn) PIN +	RLA	10.0	5.0	#8 lug	16	red	2C	15.0	710.01	
P4-14	STRM TB2	P4 PIN 14	MAIN	0.0	0.0	F crimp	Strm right fwd TB2 (U harn) PIN -	RLA	10.0	5.0	#8 lug	16	blk	2C	15.0	710.02	
STRM TB2	STRM TB5	Strm right fwd TB2 (U harn) PIN +	RLA	10.0	5.0	#8 lug	Strm rear TB5 (U harn) PIN +	RUA	22.0	5.0	#8 lug	16	red	2C	42.0	712.01	
STRM TB2	STRM TB5	Strm right fwd TB2 (U harn) PIN -	RLA	10.0	5.0	#8 lug	Strm rear TB5 (U harn) PIN -	RUA	22.0	5.0	#8 lug	16	blk	2C	42.0	712.02	
P12-9	P337-1	P12 PIN 9	MAIN	0.0	0.0	F crimp	P337 PIN 1	LUF	.5	7.0	solder	16	red	2C	7.5	865.01	Meter 24VDC power
P12-10	P337-2	P12 PIN 10	MAIN	0.0	0.0	F crimp	P337 PIN 2	LUF	.5	7.0	solder	16	blk	2C	7.5	865.02	Meter 24VDC power
P17-TBD	SPARE DASH L	P17 PIN TBD	MAIN	0.0	0.0	F crimp	Dash left spares	DASH	4.0	3.5	pigtail	16	rdbk	2C	7.5	900.01	

WIRE LABEL LINE 1	LINE 2	FROM LOCATION	Branch	Run	Offset	Term	TO LOCATION	Branch	Run	Offset	Term	WIRE AWG	Color	Type	Length	Wire #	Notes
P17-TBD	SPARE DSH M1	P17 PIN TBD	MAIN	0.0	0.0	F crimp	Dash center spares A	DASH	8.0	3.5	pigtail	16	rdbk	2C	11.5	900.02	
P17-TBD	SPARE DSH M2	P17 PIN TBD	MAIN	0.0	0.0	F crimp	Dash center spares B	DASH	8.0	3.5	pigtail	18	-	6C	11.5	900.03	
P17-TBD	SPARE DASH R	P17 PIN TBD	MAIN	0.0	0.0	F crimp	Dash right spares	DASH	12.0	3.5	pigtail	16	rdbk	2C	15.5	900.04	
P17-TBD	SPARE DSH OV	P17 PIN TBD	MAIN	0.0	0.0	F crimp	Dash overhead spares	UPPER	4.0	3.5	pigtail	16	rdbk	2C	7.5	900.05	
P30-TBD	SPARE SL LLF	P30 (SLS) PIN TBD	MAIN	0.0	0.0	F crimp	Sal lower left fwd spare (SLS)	LFWD	3.0	3.0	pigtail	16	rdbk	2C	6.0	901.01	Slideout only
P30-TBD	SPARE SL LLA	P30 (SLS) PIN TBD	MAIN	0.0	0.0	F crimp	Sal lower left aft spare (SLS)	LAFT	3.0	3.0	pigtail	16	rdbk	2C	6.0	901.02	Slideout only
P12-TBD	SPARE PASSGR	P12 PIN TBD	MAIN	0.0	0.0	F crimp	Passenger seat spares	RLF	19.0	3.0	pigtail	16	rdbk	2C	22.0	903.01	
P12-TBD	SPARE SL	P12 PIN TBD	MAIN	0.0	0.0	F crimp	Sal lower right fwd spares	RLF	15.0	3.0	pigtail	16	rdbk	2C	18.0	903.02	
P12-TBD	SPARE SL LRA	P12 PIN TBD	MAIN	0.0	0.0	F crimp	Sal lower right aft spares	RLF	10.0	3.0	pigtail	16	rdbk	2C	13.0	903.03	
P12-TBD	SPARE SAL UR	P12 PIN TBD	MAIN	0.0	0.0	F crimp	Sal upper right spares	RUF	7.0	3.0	pigtail	16	rdbk	2C	10.0	903.04	
P12-TBD	SPARE GAL LL	P12 PIN TBD	MAIN	0.0	0.0	F crimp	Galley lower left spares	LLF	1.0	3.0	pigtail	16	rdbk	2C	4.0	903.05	
P12-TBD	SPARE GAL LR	P12 PIN TBD	MAIN	0.0	0.0	F crimp	Galley lower right spares	RLF	3.0	3.0	pigtail	16	rdbk	2C	6.0	903.06	
P12-TBD	SPARE GAL UL	P12 PIN TBD	MAIN	0.0	0.0	F crimp	Galley upper left spares	LUF	.5	3.0	pigtail	16	rdbk	2C	3.5	903.07	
P12-TBD	SPARE GAL UR	P12 PIN TBD	MAIN	0.0	0.0	F crimp	Galley upper right spares	RUF	3.0	3.0	pigtail	16	rdbk	2C	6.0	903.08	
P12-TBD	SPARE CPNL L	P12 PIN TBD	MAIN	0.0	0.0	F crimp	Control panel lower spares	LLF	.5	3.0	pigtail	16	rdbk	2C	3.5	903.09	
P12-TBD	SPARE CPNL U	P12 PIN TBD	MAIN	0.0	0.0	F crimp	Control panel upper spares	LUF	.5	3.0	pigtail	16	rdbk	2C	3.5	903.10	
P12-TBD	SPARE BATH L	P12 PIN TBD	MAIN	0.0	0.0	F crimp	Bath lower spares	RLA	4.0	3.0	pigtail	16	rdbk	2C	7.0	903.11	
P12-TBD	SPARE BATH U	P12 PIN TBD	MAIN	0.0	0.0	F crimp	Bath upper spares	RUA	4.0	3.0	pigtail	16	rdbk	2C	7.0	903.12	
P12-TBD	SPARE PLAV L	P12 PIN TBD	MAIN	0.0	0.0	F crimp	Private lav lower spares	LLA	1.0	3.0	pigtail	16	rdbk	2C	4.0	903.13	
P12-TBD	SPARE PLAV U	P12 PIN TBD	MAIN	0.0	0.0	F crimp	Private lav upper spares	LUA	1.0	3.0	pigtail	16	rdbk	2C	4.0	903.14	
P12-TBD	SPARE ST LRF	P12 PIN TBD	MAIN	0.0	0.0	F crimp	Strm lower right fwd spare	RLA	11.0	3.0	pigtail	16	rdbk	2C	14.0	903.15	
P12-TBD	SPARE ST LRA	P12 PIN TBD	MAIN	0.0	0.0	F crimp	Strm lower right aft spare	RLA	21.0	3.0	pigtail	16	rdbk	2C	24.0	903.16	
P12-TBD	SPARE ST URF	P12 PIN TBD	MAIN	0.0	0.0	F crimp	Strm upper right fwd spare	RUA	8.5	3.0	pigtail	16	rdbk	2C	11.5	903.17	
P12-TBD	SPARE ST URA	P12 PIN TBD	MAIN	0.0	0.0	F crimp	Strm upper right aft spare	RUA	21.0	3.0	pigtail	16	rdbk	2C	24.0	903.18	
P26-11	J55-11	P26 PIN 11	MAIN	0.0	0.0	F crimp	J55 PIN 11	AFT	31.0	1.0	M crimp	16	red	2C	32.0	904.01	Stateroom left spares
P26-12	J55-12	P26 PIN 12	MAIN	0.0	0.0	F crimp	J55 PIN 12	AFT	31.0	1.0	M crimp	16	blk	2C	32.0	904.02	Stateroom left spares
P26-13	J55-13	P26 PIN 13	MAIN	0.0	0.0	F crimp	J55 PIN 13	AFT	31.0	1.0	M crimp	16	red	2C	32.0	904.03	Stateroom left spares
P26-14	J55-14	P26 PIN 14	MAIN	0.0	0.0	F crimp	J55 PIN 14	AFT	31.0	1.0	M crimp	16	blk	2C	32.0	904.04	Stateroom left spares
P55-TBD	SPARE ST LLF	P55 PIN TBD	MAIN	0.0	0.0	F crimp	Strm lower left fwd spare(SRL)	LOWER	5.0	3.0	pigtail	16	rdbk	2C	8.0	904.05	Inside of slideout area
P55-TBD	SPARE ST LLA	P55 PIN TBD	MAIN	0.0	0.0	F crimp	Strm lower left aft spare(SRL)	LOWER	1.0	3.0	pigtail	16	rdbk	2C	4.0	904.06	Inside of slideout area
P55-TBD	SPARE ST ULF	P55 PIN TBD	MAIN	0.0	0.0	F crimp	Strm upper left fwd spare(SRL)	UPPER	3.0	3.0	pigtail	16	rdbk	2C	6.0	904.07	Inside of slideout area
P55-TBD	SPARE ST ULA	P55 PIN TBD	MAIN	0.0	0.0	F crimp	Strm upper left aft spare(SRL)	UPPER	3.0	3.0	pigtail	16	rdbk	2C	6.0	904.08	Inside of slideout area
P21-TBD	SPARE RIGHT	P21 PIN TBD	MAIN	0.0	0.0	F crimp	Right tube spares	AFT	17.0	6.0	pigtail	10	red	1C	23.0	905.01	
P21-TBD	SPARE RIGHT	P21 PIN TBD	MAIN	0.0	0.0	F crimp	Right tube spares	AFT	17.0	6.0	pigtail	10	blk	1C	23.0	905.02	
P22-TBD	SPARE GEN	P22 PIN TBD	MAIN	0.0	0.0	F crimp	Generator spares	AFT	8.0	9.0	pigtail	16	rdbk	2C	17.0	906.01	
P24-9	J402-9	P24 PIN 9	MAIN	0.0	0.0	F crimp	J402 PIN 9	AFT	17.0	7.0	M crimp	16	red	2C	24.0	907.01	Aq hot spare
P24-10	J402-10	P24 PIN 10	MAIN	0.0	0.0	F crimp	J402 PIN 10	AFT	17.0	7.0	M crimp	16	blk	2C	24.0	907.02	Aq hot spare
SPARE TR A	J201-6	Trailer hitch spare A PIN +	FWD	4.0	16.0	M crimp	J201 PIN 6	AFT	31.0	10.0	M crimp	16	red	2C	61.0	908.01	
SPARE TR A	J201-7	Trailer hitch spare A PIN -	FWD	4.0	16.0	M crimp	J201 PIN 7	AFT	31.0	10.0	M crimp	16	blk	2C	61.0	908.02	
SPARE TR B	J201-8	Trailer hitch spare B PIN +	FWD	4.0	16.0	M crimp	J201 PIN 8	AFT	31.0	10.0	M crimp	16	red	2C	61.0	908.03	
SPARE TR B	J201-9	Trailer hitch spare B PIN -	FWD	4.0	16.0	M crimp	J201 PIN 9	AFT	31.0	10.0	M crimp	16	blk	2C	61.0	908.04	
ELEC BRAKE	J201-1	Electric brake module PIN +	FWD	7.0	16.0	splice	J201 PIN 1	AFT	31.0	10.0	M crimp	10	red	1C	64.0	960.01	Future elec brakes or Remco
ELEC BRAKE	J201-2	Electric brake module PIN -	FWD	7.0	16.0	splice	J201 PIN 2	AFT	31.0	10.0	M crimp	10	blk	1C	64.0	960.02	Future elec brakes or Remco
ELEC BRAKE	J201-3	Electric brake module PIN SIG	FWD	7.0	16.0	splice	J201 PIN 3	AFT	31.0	10.0	M crimp	10	vio	1C	64.0	960.03	Brake module signal
REMCO	J201-4	Remco control module PIN +	FWD	7.0	16.0	splice	J201 PIN 4	AFT	31.0	10.0	M crimp	10	red	1C	64.0	962.01	If REMCO
REMCO	J201-5	Remco control module PIN -	FWD	7.0	16.0	splice	J201 PIN 5	AFT	31.0	10.0	M crimp	10	blk	1C	64.0	962.02	If REMCO

Ckt. No	Description	Wire Type	From	To	Notes	Code
AV-01	Salon speakers	Speaker	Fwd. Bose Sub Woofer	Front Left Speaker (Fwd. Overhead)	Per A/V Layout	1
AV-02	" " "	"	Fwd. Bose Sub Woofer	Center Speaker (Fwd. Overhead)	" " "	1
AV-03	" " "	"	Fwd. Bose Sub Woofer	Front Rt. Speaker (Fwd. Overhead)	" " "	1
AV-04	" " "	"	Fwd. Bose Sub Woofer	Rear Left Speaker (Salon Valance)	via art. arm	1
AV-05	" " "	"	Fwd. Bose Sub Woofer	Rear Right Speaker (Salon Valance)	Per A/V Layout	1
AV-08	Bay speakers	Speaker	Bay 4R Stereo	Bay speaker left	Install @ finish stage, per A/V layout	2
AV-09	" " "	"	" " "	Bay speaker right	" " "	2
AV-14	Driver stereo speakers	Speaker	Driver Stereo	Left speaker (Fwd. Overhead)	Per Electrical Layout	1
AV-15	" " "	"	Driver Stereo	Right speaker (Fwd. Overhead)	" " "	1
AV-16	CB speaker	"	CB Radio	CB extension speaker @ column	" " "	1
AV-17	GPS ext. Speaker	"	GPS unit	GPS ext. speaker @ column	" " "	1
RF-01	RF Video	RG6	Fwd. overhead splitter	TV Antenna (roof)	" " "	1
RF-02	" " "	RG6	Fwd. overhead A/B switch	Shore Cable (bay 5L)	" " "	1
RF-03	" " "	RG6	Fwd. overhead A/B switch	RF distribution amplifier	Install @ Finish	1
RF-05	" " "	RG6	Fwd. Overhead (dist. amp)	VCR #1	Install @ Finish	2
RF-06	" " "	RG6	Fwd. Overhead (dist. amp)	BAY 4R TV	Ref. AV Layout	2

APPROVAL:	DATE: 9/4/03		SUBJECT: Audio / Visual. Wire Circuit List For H3-45 Motorcoaches	DOCUMENT NO. WL-4620-007AMX	REV: A / DATE: 9/3/03
APPROVAL:	DATE:			VANTARE ENGINEERING STANDARD PRACTICE	
AUTHOR: KSL	ORIGIN DATE: 7/30/03	APPROVAL:			PAGE: 1 OF 4

Ckt. No	Description	Wire Type	From	To	Code Notes	
RF-07	" " "	RG6	Fwd. Overhead (dist. amp)	VCR #2 @ Aft Entertainment cabinet	" " "	1
RF-10	" " "	RG6	Satellite LNB #1	DSR #1 @ Aft Entertainment cabinet	Ref: AV Layout	1
RF-11	" " "	RG6	Satellite LNB #2	DSR #2 @ Aft Entertainment cabinet		1
RF-13	" " "	RG6	Fwd o/h splitter	Fwd A/B switch	Ref: AV Layout	2
RF-14	RF Audio	RG6	" " "	Bose Head unit in the fwd o/h	" " "	2
RC-01	Line Level A/V	1 RG-6 + RCA 1 pr.	Matrix Switcher (Video through AMX VSS-2)	VCR 1 @ Fwd O/H cabinet		1
RC-02	" " "	"	" " "	VCR 2 @ Aft Entertainment cabinet		2
RC-03	" " "	"	" " "	Sat. receiver 1 @ Aft Ent. Cabinet		2
RC-04	" " "	"	" " "	Sat. Receiver 2 @ Aft Ent. Cabinet		2
RC-05	" " "	"	" " "	DVD 1 @ Fwd O/H Ent. cabinet		1
RC-06	" " "	"	Matrix Switcher	BOSE LS-35 DVD player@ Fwd O/H Ent. Cabinet		1
RC-09	line level video	RG-6	Matrix Switcher	Salon Plasma TV		1
RC-09A	line level audio	RCA 1 pr.	" " "	Bose Music center		1
RC-10	line level video	RG-6	" " "	Stateroom Plasma TV		1 or 2
RC-10A	line level Audio	RCA 1 pr	" " "	BOSE LS-35 DVD player@ Fwd O/H Ent. Cabinet		1
RC-11	line level A/V	1RG6 + RCA	Matrix Switcher	27" TV BAY 4R		1

APPROVAL:	DATE: 9/4/03	SUBJECT: Audio / Visual. Wire Circuit List For H3-45 Motorcoaches	DOCUMENT NO. WL-4620-007AMX	REV: A	DATE: 9/3/03
APPROVAL:	DATE:		VANTARE ENGINEERING STANDARD PRACTICE		
AUTHOR: KSL	ORIGIN DATE: 7/30/03	APPROVAL:		PAGE: 2 OF 4	

Ckt. No	Description	Wire Type	From	To	Notes	Code
		1pr.				
RC-11A	line level audio	RCA 1pr	Matrix Switcher (SPARE)	BAY STEREO Bay 1 (SPARE)		1
RC-12	" " "	1RG6 + RCA 1pr.	" " "	VCR 1 (input)		1
RC-13	" " "	"	" " "	Dash LCD Monitor		1
RC-14	" " "	RCA 1pr.	27" bay TV	Bay radio		1
RC-19	" " "	Bose Din	Bose Music Center Zone 1 (fwd. O.H.)	Fwd. Subwoofer @ under Salon sofa		1
RC-20A	" " "	Bose Din	Bose Music Center Zone 2 (fwd. O.H.)	Aft Subwoofer Extension Cable RC-20B	Factory cable	1
RC-20B	" " "	RCA 1pr + 1/8" stereo jack	Bose RC-20A (fwd. O.H.)	Aft Sub-woofer Cable RC-20C	Factory cable	1
RC-20C	" " "	Bose Din	RC-20B Extension Cable	Bose Sub-woofer @ under Strm bed	Factory cable	1
CAM-1	Coach Backup Camera	RG-6	Dash	Stateroom aft closet		1
CAM-2	Trailer camera	RG-6	Dash	Rear Bumper (spare)		1
AX-1	Axlink data cable	4-cond+shld	AMX controller	Fwd. overhead		1
AX-2	" " "	4-cond+shld	" " "	Aft ent. cabinet		1
AX-3	" " "	4-cond+shld	" " "	Bay 1R Ent. Cabinet		1
AX-4	" " "	4-cond+shld	" " "	Fwd. O.H.		1

APPROVAL:	DATE: 9/4/03		SUBJECT: Audio / Visual. Wire Circuit List For H3-45 Motorcoaches	DOCUMENT NO. WL-4620-007AMX	REV: A / DATE: 9/3/03
APPROVAL:	DATE:			VANTARE ENGINEERING STANDARD PRACTICE	
AUTHOR: KSL	ORIGIN DATE: 7/30/03	APPROVAL:			PAGE: 3 OF 4

Ckt. No	Description	Wire Type	From	To	Code	Notes
AX-5	" " "	4-cond+shld	" " "	Bay 4R TV		1
IR-1	IR flashers	12 cond	AMX controller	Fwd. Overhead		1
RS232-A	RS-232	6-cond+shld	Salon Plasma TV	AMX controller		1
RS232-B	" " "	" "	Stateroom Plasma TV	AMX controller		1

APPROVAL:	DATE: 9/4/03		SUBJECT: Audio / Visual. Wire Circuit List For H3-45 Motorcoaches	DOCUMENT NO. WL-4620-007AMX	REV: A	DATE: 9/3/03
APPROVAL:	DATE:			VANTARE ENGINEERING STANDARD PRACTICE		
AUTHOR: KSL	ORIGIN DATE: 7/30/03	APPROVAL:			PAGE: 4 OF 4	

Ckt. No	Description	Wire Type	From	To	Notes
P-01	Shore Phone Line in	Cat-5e	Phone Interface location Bay 1R	Plumbing Bay Shore connection	Ref: Bay layout
P-02	Spare	Cat-5e	Phone Interface location Bay 1R	Spare @ driver's column	Ref: Electric layout & 9060052
P-03	Driver Phone Jack	Cat-5e	Phone Interface location Bay 1R	Cabinet Behind driver, phone jack	Ref: Electric layout & 9060052
P-05	Stateroom Phone Jack	Cat-5e	Phone Interface location Bay 1R	Stateroom Phone jack (strm phone)	Ref: Electric layout & 9060052
P-06	Bay Phone Jack	Cat-5e	Phone Interface location Bay 1R	Bay 4R Phone jack location	Ref: Bay layout & 9060052
P-07	DSR# 1 Phone Jack	Cat-5e	Phone Interface location Bay 1R	DSR# 1 location @ aft AV cabinet	Ref: A/V Layout & 9060052
P-08	DSR# 2 Phone Jack	Cat-5e	Phone Interface location Bay 1R	DSR# 2 location @ aft AV cabinet	Ref: Electric layout & 9060052
P-09	Dinette Phone Jack	RJ-11	Phone Interface location Bay 1R	Dinette phone jack location	Ref: Electric layout & 9060052

APPROVAL:	DATE: 9/2/03	SUBJECT: Telecommunications cable List Coach –SANIBEL I - 4620	DOCUMENT NO. WL-SANIBEL I –4620-009	REV: -	DATE: 7/30/03
APPROVAL:	DATE:		VANTAGE ENGINEERING STANDARD PRACTICE		
AUTHOR: KSL	ORIGIN DATE: 7/30/03	APPROVAL:		PAGE: 1 OF 1	

REVISIONS			
REV.	DESCRIPTION	DATE	APPROVAL
A	REDRAW	3/16/00	HAK
B	ADD,SHEET-34	5/17/00	HAK
C	SH,7,0-ADD-ENTRY,DOOR LGTS	6/8/00	HAK
D	SH7,9,ADD,D1,D31 FIX,J14-15	6/12/00	HAK
E	SHT-1,REFORMAT	7/24/00	HAK
F	UP-DATED,REV,BLOCK ADDED SHEETS 34 THRU 37	8/1/03	MJF

KEYPAD SWITCH PWA
(4x1 SWITCH ASSY)

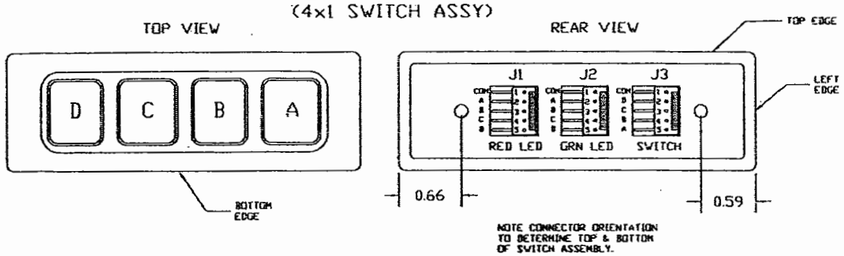

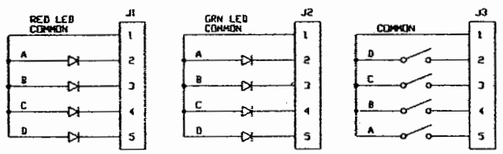

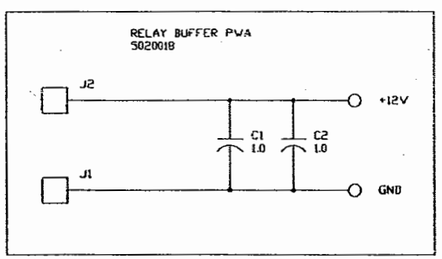

TABLE OF CONTENTS

SHEET	DESCRIPTION
19	Air Compressor
28	Air Slide Stepwell
28	Antenna/Shore Power Alarm
32	Aquahot
36	Bath & Private Lav Fan Thermostats
6	Bathroom Overhead lights
16	Bathroom Vanity Light
23	Bay Doors Lock/Unlock
13	Bay Lights Defeat
24	Black, Gray Dump, Left Side
25	Black, Gray Dump, Right Side (Option)
30	Breaker Feed DC Relay Circuits
20	Ceiling Fan (Option)
16	Chandelier (Option)
12	Desk Lights (Option)
12	Dinette Overhead Lights
13	Driver's Overhead Light
29	Electric Sofas
26	Engine Battery Boost
7	Entry Overhead Light
5	Exterior Entry Light (Option)
14	Exterior Lights (Left)
14	Exterior Lights (Right)
14	Exterior Lights Override
15	Fiberoptic Color Wheel (Option)
15	Fiberoptic Illuminator (Option)
18	Forward Indirect Lights
27	Fresh Water Fill
4	Galley Overhead Light

SHEET	DESCRIPTION
12	Galley Work Lights
17	Generator Preheat
17	Generator Start
17	Generator Stop
10	Lights, Master
13	Map Lights
11	Panel Lights
35	Panel Lights AC Switch Panel
22	Pocket Doors (Obsolete Air Doors)
27	Privacy Shade (Option)
5	Private Lav Overhead Lights
16	Private Lav Vanity Light
19	Rear Indirect Lights
34	RVAC Booster Fan (Option)
12	Salon Accent Lights
2	Salon Left Overhead Lights
3	Salon Right Overhead Lights
16	Salon Sconce Lights (Option)
5	Shower Lights
15	Spotlight (Option)
13	Stateroom Accent Lights
8	Stateroom Overhead Lights
9	Stepwell Lights
29	Tank Gauges, Single (Option)
33	Tank Gauges, Dual
31	Terminal Block DC Circuits
37	Under Slideout Lights
21	Water Pump

SHEET	1	2	3	4	5	6	7	8	9	10	11	12	13	14	15	16	17	18	19	20
REVISION	F	B	B	B	D	B	E	C	E	C	C	C	B	B	C	B	D	B	C	B
SHEET	21	22	23	24	25	26	27	28	29	30	31	32	33	34	35	36	37	38		
REVISION	B	-	C	B	B	B	B	C	A	B	A	C	-	A	-	B	A	A		

DWG. BY RK
CHK. BY RK
ENGR. BY RK
CHASIS: H3
DATE : 12/10/98

PROPRIETARY NOTICE:
THIS DOCUMENT AND THE INFORMATION DISCLOSED ARE CONFIDENTIAL AND PROPRIETARY TO FEATHERLITE. DISCLOSURE OF SUCH INFORMATION IS EXPRESSLY FORBIDDEN WITHOUT OUR PRIOR WRITTEN PERMISSION

FEATHERLITE
1601 DOLGNER PL
SANFORD FLA 32771
TEL. 1-407-323-1120 FAX 1-407-323-1945

TITLE:
SCHEMATIC,DC-RELAY-PANEL

SCALE: NONE
DRAWING NO.: 9060005
DRAWING FILE # 9060005-1F.DWG
SHEET: 1 OF -
REV F

NOTE — INTERPRET ALL DRAWINGS IN ACCORDANCE WITH ANSI Y14.5-1982

▷ WAVY LINE INDICATES RIBBON CABLE.

REVISIONS			
REV.	DESCRIPTION	DATE	APPROVAL
A	CHANGE,K6A,K6B,K6C-REF-NUMBERS TO,K3A,K3B,K3C.	12/17/98	HAK
B	REFORMATTED,FIXED,BI-COLOR,P41 CORRECTED,J19,-PLC-WIRING.	8/23/94	TED

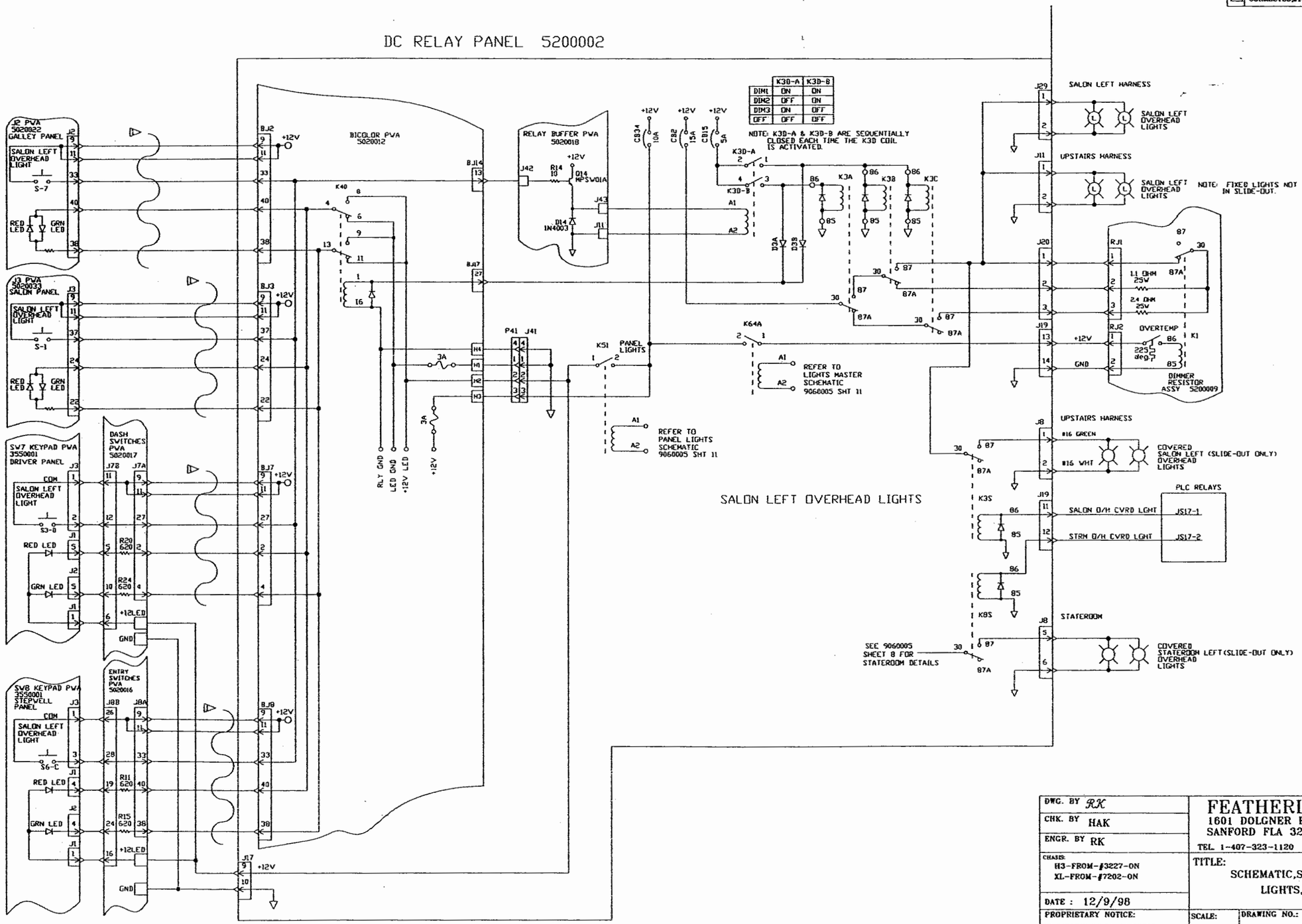

DWG. BY RK	FEATHERLITE 1601 DOLGNER PL SANFORD FLA 32771 TEL. 1-407-323-1120 FAX 1-407-323-1945		
CHK. BY HAK			
ENGR. BY RK			
CHASIS: H3-FROM-#3227-ON XL-FROM-#7202-ON	TITLE: SCHEMATIC,SALON-LEFT-OVERHEAD LIGHTS,DC-RELAY-PANEL		
DATE : 12/9/98			
PROPRIETARY NOTICE: THIS DOCUMENT AND THE INFORMATION DISCLOSED ARE CONFIDENTIAL AND PROPRIETARY TO FEATHERLITE. DISCLOSURE OF SUCH INFORMATION IS EXPRESSLY FORBIDDEN WITHOUT OUR PRIOR WRITTEN PERMISSION	SCALE: NONE	DRAWING NO.: 9060005	REV B
		DRAWING FILE # 9060005-02B.DWG	SHEET: 2 OF -

NOTE — INTERPRET ALL DRAWINGS IN ACCORDANCE WITH ANSI Y14.5-1982
1 WAVY LINE INDICATES RIBBON CABLE

REVISIONS			
REV.	DESCRIPTION	DATE	APPROVAL
A	CHANGE-K51-1,TO,K51-1-& K51-1,TO,K51-2	1/14/99	HAK
B	REFORMATTED,FIXED,BI-COLOR PINOUT,P41	8/22/01	TED

DC RELAY PANEL
5200002

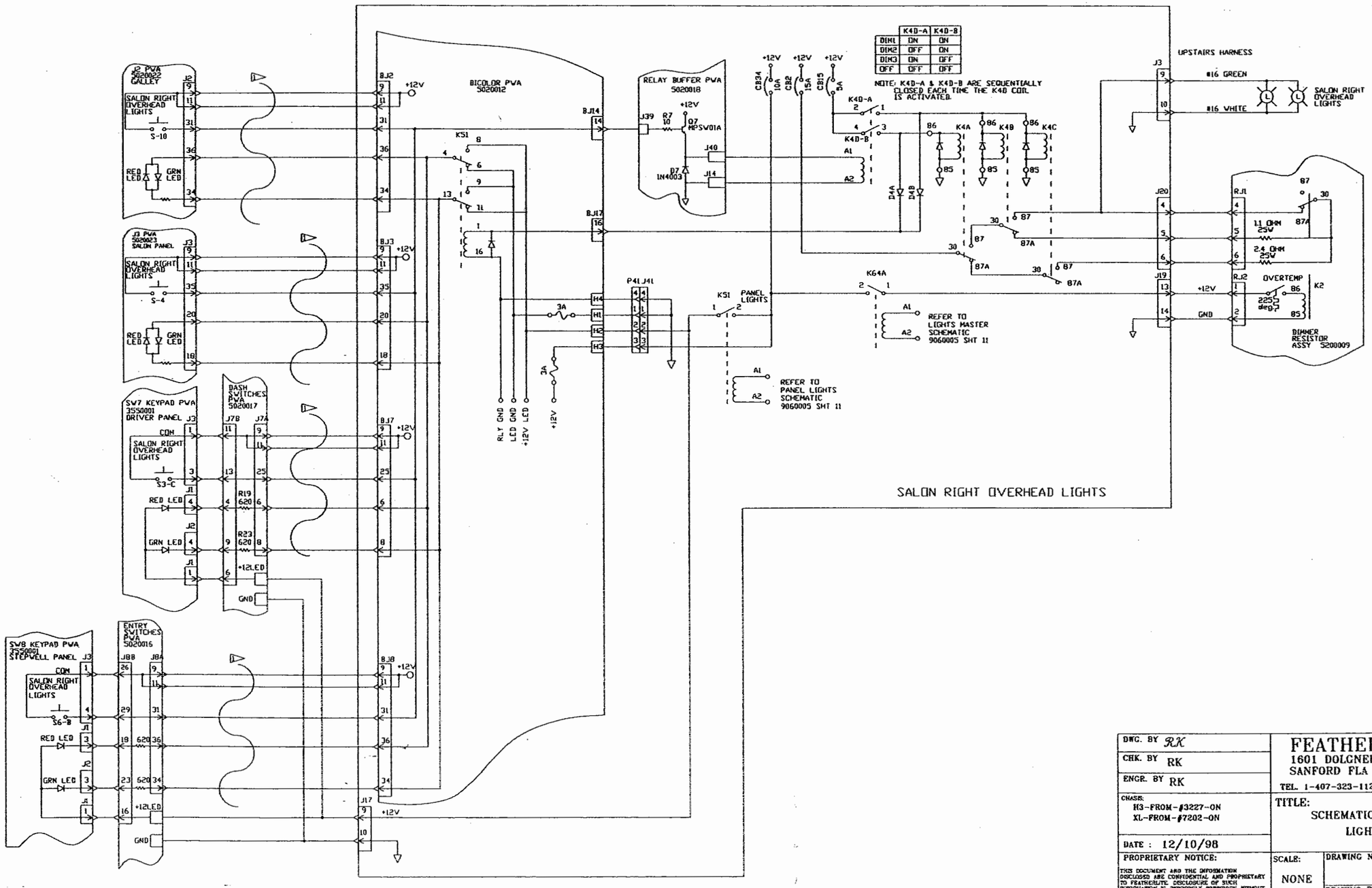

DWG. BY RK	FEATHERLITE 1601 DOLGNER PL SANFORD FLA 32771 TEL. 1-407-323-1120 FAX 1-407-323-1945	
CHK. BY RK		
ENGR. BY RK		
CHASIS: H3-FROM-#3227-ON XL-FROM-#7202-ON	TITLE: SCHEMATIC,SALON-RIGHT-OVERHEAD LIGHTS,DC-RELAY-PANEL	
DATE : 12/10/98		
PROPRIETARY NOTICE: THIS DOCUMENT AND THE INFORMATION DISCLOSED ARE CONFIDENTIAL AND PROPRIETARY TO FEATHERLITE. DISCLOSURE OF SUCH INFORMATION IS EXPRESSLY FORBIDDEN WITHOUT OUR PRIOR WRITTEN PERMISSION	SCALE: NONE	DRAWING NO.: 9060005
	DRAWING FILE # 9060005-03B.DWG	SHEET: 3 OF -
		REV B

NOTE —

WAVY LINES INDICATE RIBBON CABLES.

REVISIONS			
REV.	DESCRIPTION	DATE	APPROVAL
A	CHANGE,K51-1,TO,K51-2 K51-2,TO,K51-1	1/14/00	HAK
B	REFORMATE,FIX,BI-COLOR,J41 UPDATE,SLIDEOUT,CONTROLLER	9/15/01	TED

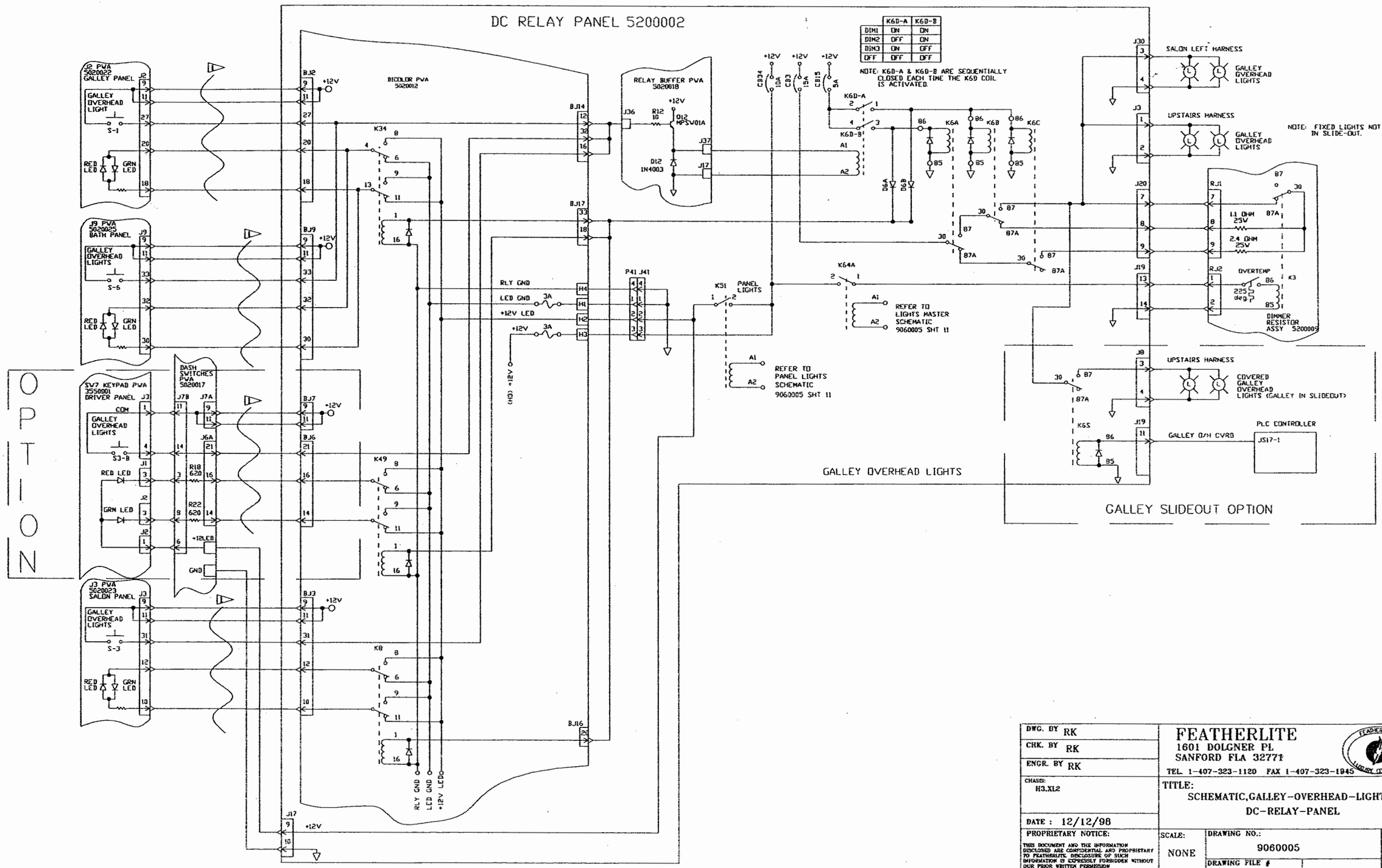

DWG. BY RK	FEATHERLITE 1601 DOLGNER PL SANFORD FLA 32771 TEL. 1-407-323-1120 FAX 1-407-323-1945	
CHK. BY RK		
ENGR. BY RK		
CHASSIS: H3,XL2	TITLE: SCHEMATIC,GALLEY-OVERHEAD-LIGHTS, DC-RELAY-PANEL	
DATE : 12/12/98		
PROPRIETARY NOTICE: THIS DOCUMENT AND THE INFORMATION DISCLOSED ARE CONFIDENTIAL AND PROPRIETARY TO FEATHERLITE. DISCLOSURE OF SUCH INFORMATION IS EXPRESSLY FORBIDDEN WITHOUT OUR PRIOR WRITTEN PERMISSION	SCALE: NONE	DRAWING NO.: 9060005 — REV B
		DRAWING FILE # 9060005-4B.DWG — SHEET: 4 OF —

NOTE —

1 WAVY LINE INDICATES RIBBON CABLE

REVISIONS			
REV.	DESCRIPTION	DATE	APPROVAL
A	CHANGED,K51-1,TO,K51-2 K51-2,TO,K51-1	1/14/99	RK
B	CHG.EXT-LIGHT,FROM,CB1,TO,CB24 PER,EW10148,NEW-FORMAT	12/4/00	HAK
C	ADD PRIV. LAV VANITY TO PRIV. LAV OVERHEAD	1/13/03	LMG
D	CHANGE EXTERIOR LIGHT TO OPTION	7/8/03	MJF

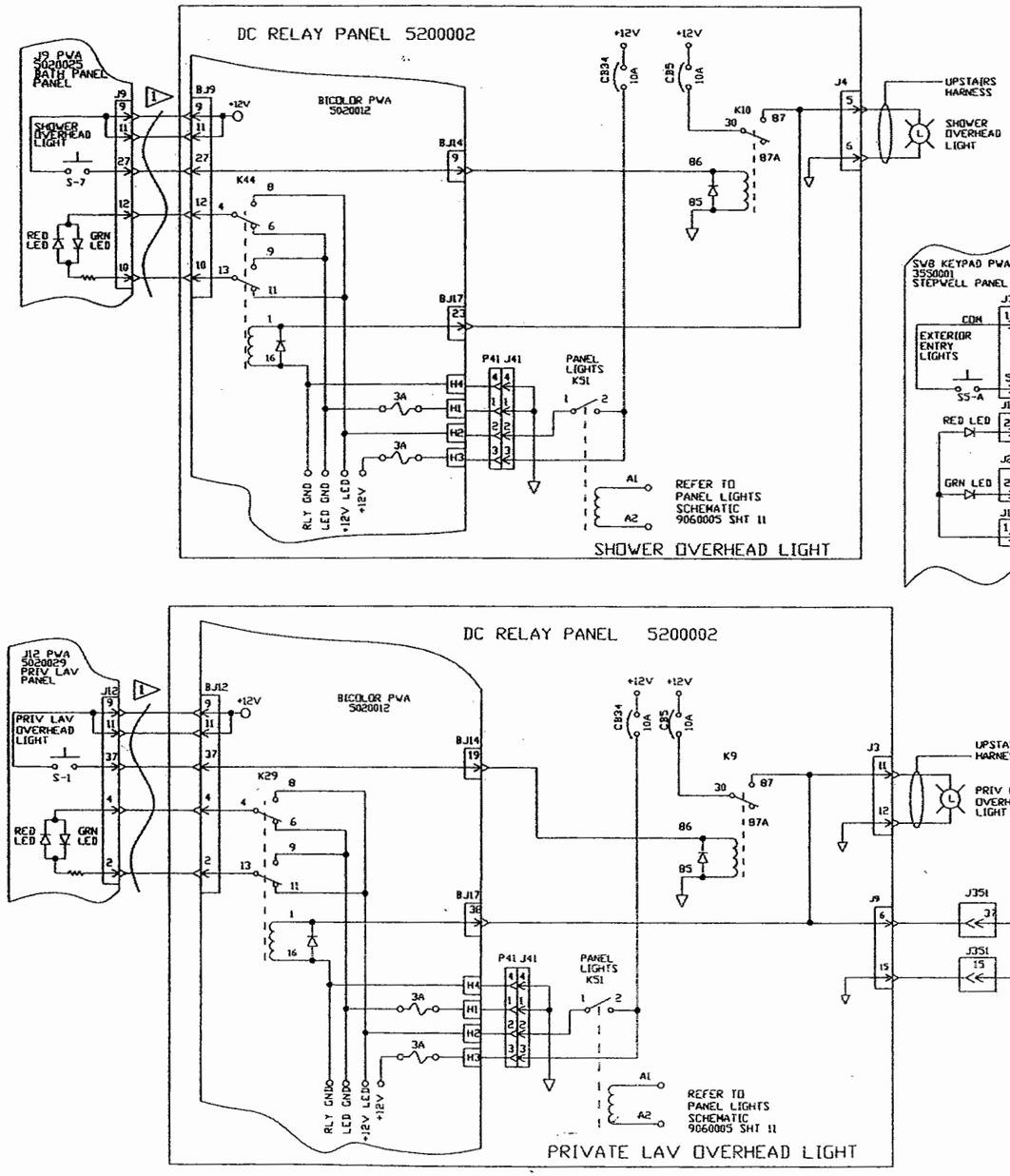

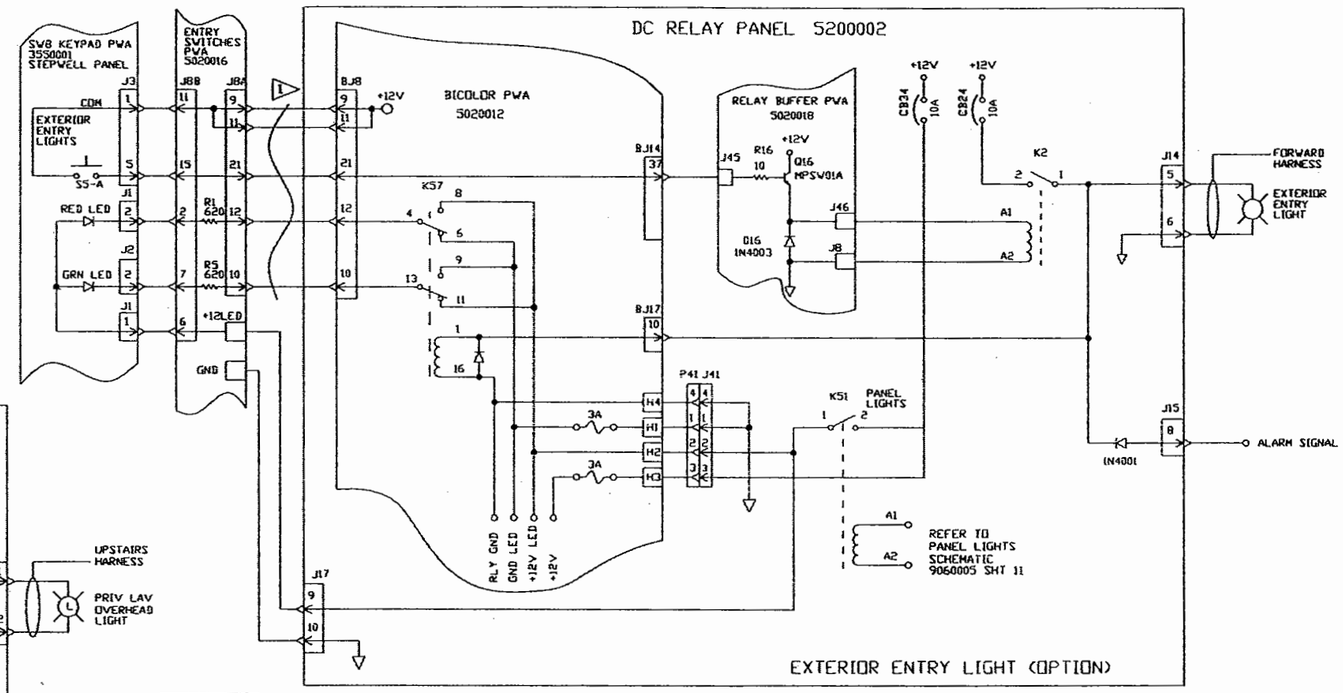

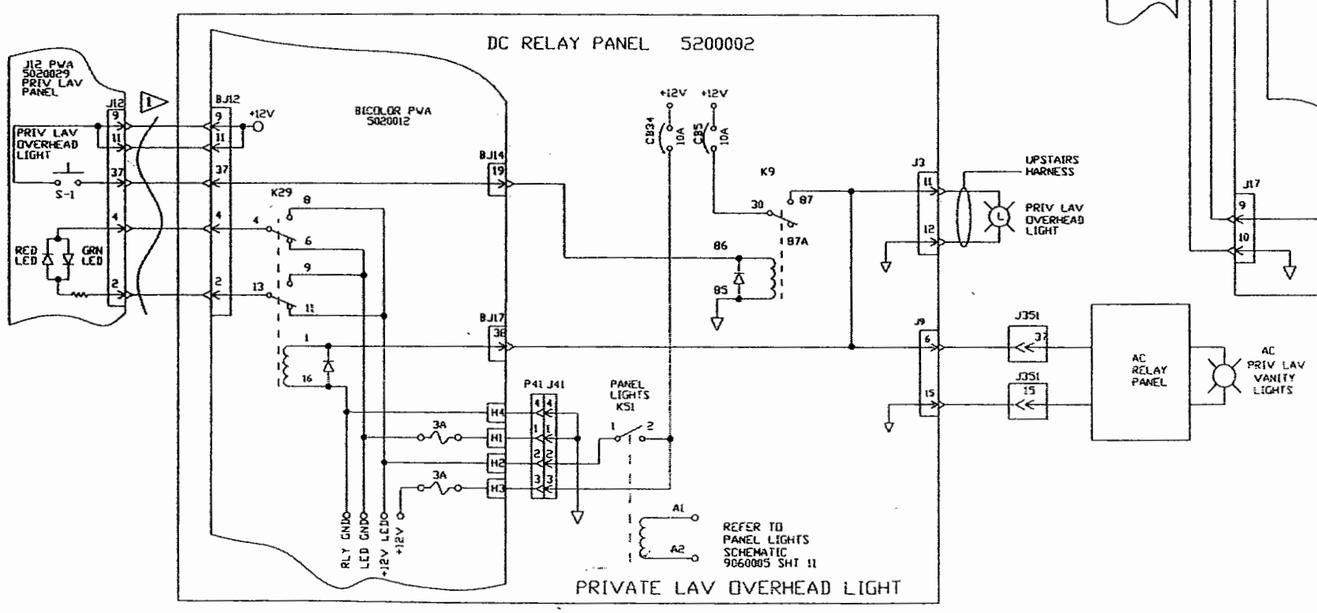

DWG. BY RK	FEATHERLITE 1601 DOLGNER PL SANFORD FLA 32771 TEL 1-407-323-1120 FAX 1-407-323-1945
CHK. BY RK	
ENGR. BY RK	
CHASSIS H3	TITLE: SCHEMATIC,PRIV-LAV,SHOWER,EXT ENTRY-LIGHT,DC-RELAY-PANEL,H3
DATE : 12/13/98	
PROPRIETARY NOTICE: THIS DOCUMENT AND THE INFORMATION DISCLOSED ARE CONFIDENTIAL AND PROPRIETARY TO FEATHERLITE. DISCLOSURE OF SUCH INFORMATION IS EXPRESSLY FORBIDDEN WITHOUT OUR PRIOR WRITTEN PERMISSION	SCALE: NONE — DRAWING NO.: 9060005 — DRAWING FILE # 9060005-5D.DWG — SHEET: 5 OF — REV D

NOTE —

WAVY LINE INDICATES RIBBON CABLE.

REVISIONS			
REV.	DESCRIPTION	DATE	APPROVAL
A	CHANGE-K51-1,TO,K51-2 AND,K51-2,TOK51-1	1/14/99	HAK
B	REFORMATE,FIX,BI-COLOR,J41 ADD,PART,NUMBERS	09/13/01	TED

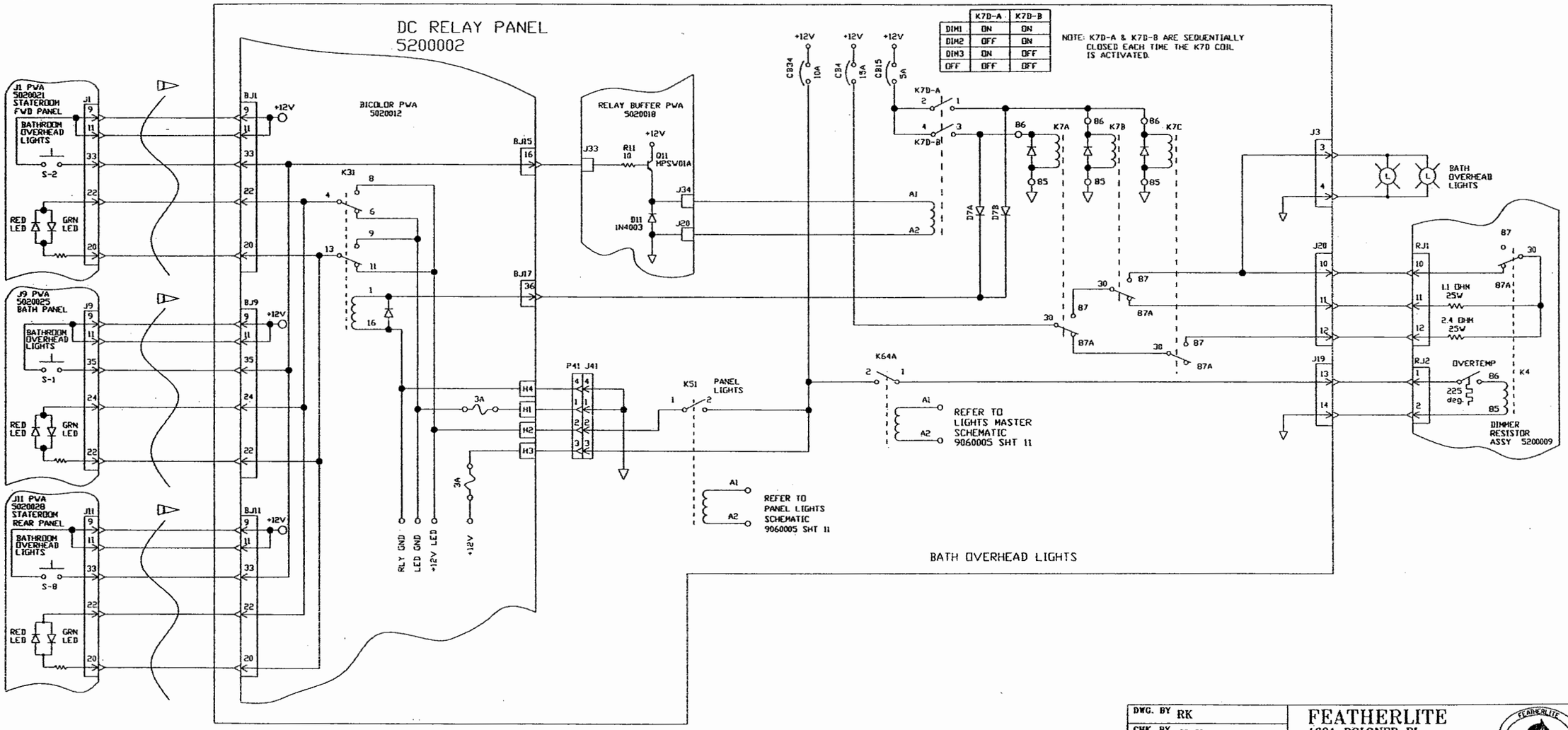

	K7D-A	K7D-B
DIM1	ON	ON
DIM2	OFF	ON
DIM3	ON	OFF
OFF	OFF	OFF

NOTE: K7D-A & K7D-B ARE SEQUENTIALLY CLOSED EACH TIME THE K7D COIL IS ACTIVATED.

DWG. BY RK

CHK. BY HAK

ENGR. BY RK

CHASIS: H#,XL2

DATE : 12/12/98

PROPRIETARY NOTICE:

THIS DOCUMENT AND THE INFORMATION DISCLOSED ARE CONFIDENTIAL AND PROPRIETARY TO FEATHERLITE. DISCLOSURE OF SUCH INFORMATION IS EXPRESSLY FORBIDDEN WITHOUT OUR PRIOR WRITTEN PERMISSION

FEATHERLITE
1601 DOLGNER PL
SANFORD FLA 32771
TEL 1-407-323-1120 FAX 1-407-323-1945

TITLE:
SCHEMATIC,BATH-OVERHEAD-LIGHTS,
DC-RELAY-PANEL

SCALE: NONE

DRAWING NO.: 9060005

DRAWING FILE # 9060005-6B.DWG

SHEET: 6 OF -

REV B

NOTE —
WAVY LINES INDICATE RIBBON CABLE

REVISIONS			
REV.	DESCRIPTION	DATE	APPROVAL
A	CHANGE,K51-1,TO,K51-2 K51-2,TO,K51-1	1/14/99	RK
B	ADD-DOOR-OVERRIDE-CIRCUIT PER,EM10091	7/20/99	
C	CHANGE-CB1,CB21,TO,15A PER,EM10091,REV-C	8/30/99	
D	ADD-D31,CORRECT,TO,J14-15 REFORMAT	6/7/00	HAK
E	CORRECT,BI-COLOR,J41 REFORMAT	9/12/01	TED

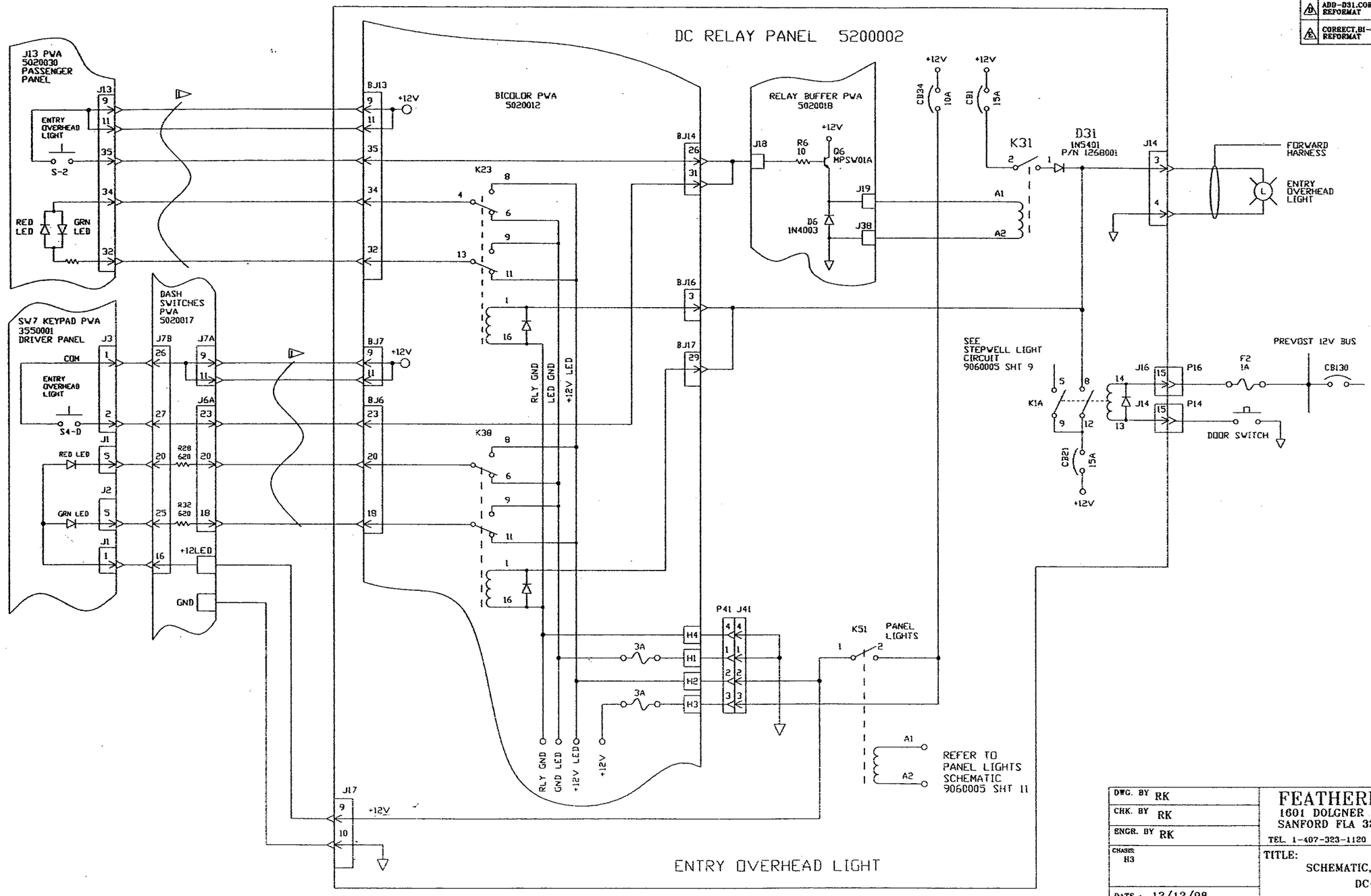

DWG. BY RK	FEATHERLITE 1601 DOLGNER PL SANFORD FLA 32771 TEL. 1-407-323-1120 FAX 1-407-323-1945	
CHK. BY RK		
ENGR. BY RK		
CHASIS H3	TITLE: SCHEMATIC,ENTRY-OVRHD-LIGHTS DC-RELAY-PANEL	
DATE : 12/12/98		
PROPRIETARY NOTICE: THIS DOCUMENT AND THE INFORMATION DISCLOSED ARE CONFIDENTIAL AND PROPRIETARY TO FEATHERLITE. DISCLOSURE OF SUCH INFORMATION IS EXPRESSLY FORBIDDEN WITHOUT DUE PRIOR WRITTEN PERMISSION	SCALE: NONE	DRAWING NO.: 9060005 — REV E
		DRAWING FILE # 9060005-7E.DWG — SHEET: 7 OF —

NOTE —

WAVY LINE INDICATES RIBBON CABLE.

REVISIONS			
REV.	DESCRIPTION	DATE	APPROVAL
A	UPDATE,SLIDEOUT,CONTROLL,CONN. REF.-NUMBERS	12/17/98	HAK
B	CHANGE-K51-1,TO,K51-2 K51-2,TO,K51-1	1/14/99	HAK
B	REFORMAT,FIX,BI-COLOR,J41 ADD,PART,NUMBERS	9/15/01	TED

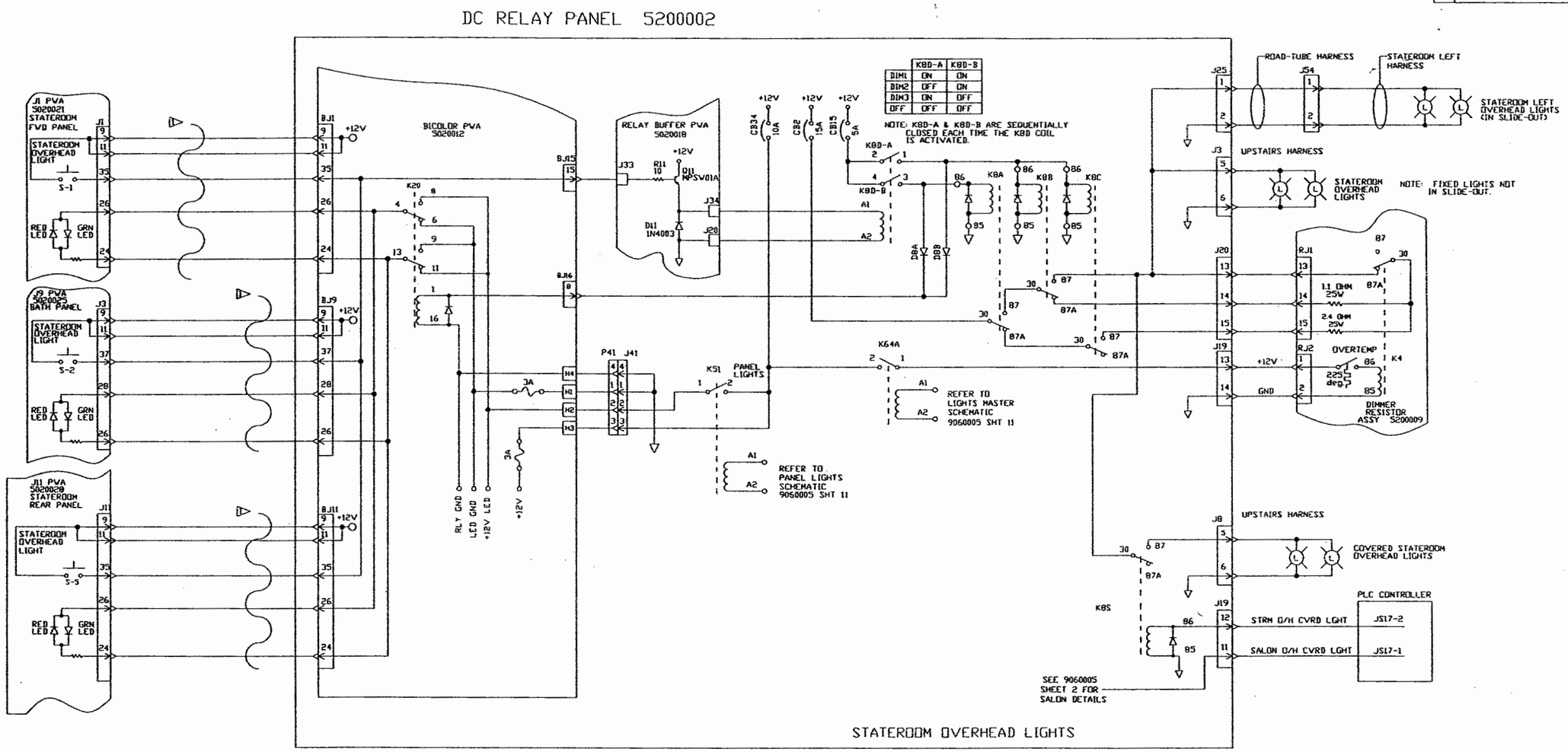

DWG. BY RK	FEATHERLITE 1601 DOLGNER PL. SANFORD FLA 32771 TEL. 1-407-323-1120 FAX 1-407-323-1945
CHK. BY RK	
ENGR. BY RK	
CHASSI: H3	TITLE: SCHEMATIC,STATEROOM-OVERHED LIGHTS,DC-RELAY-PANEL
DATE : 12/9/98	
PROPRIETARY NOTICE: THIS DOCUMENT AND THE INFORMATION DISCLOSED ARE CONFIDENTIAL AND PROPRIETARY TO FEATHERLITE. DISCLOSURE OF SUCH INFORMATION IS EXPRESSLY FORBIDDEN WITHOUT OUR PRIOR WRITTEN PERMISSION	SCALE: NONE / DRAWING NO.: 9060005 / REV C / DRAWING FILE # 9060005-8C.DWG / SHEET: 8 OF -

NOTE —

WAVY LINE INDICATES RIBBON CABLE

REVISIONS			
REV.	DESCRIPTION	DATE	APPROVAL
A	CHANGE,K51-1,TO,K51-2 K51-2,TO,K51-1	1/14/99	KL
B	ADD-DOOR-OVRD-CIRCUIT PER,EM10091	7/22/99	KL
C	CHANGE,CB1,CB21,TO.15A PER,EM10091,REV-C	8/30/99	KL
D	ADD,D1.CORRECT,J14-15	6/12/00	HAK
E	CORRECT,BI-COLOR,J41 REFORMAT	9/18/01	TED

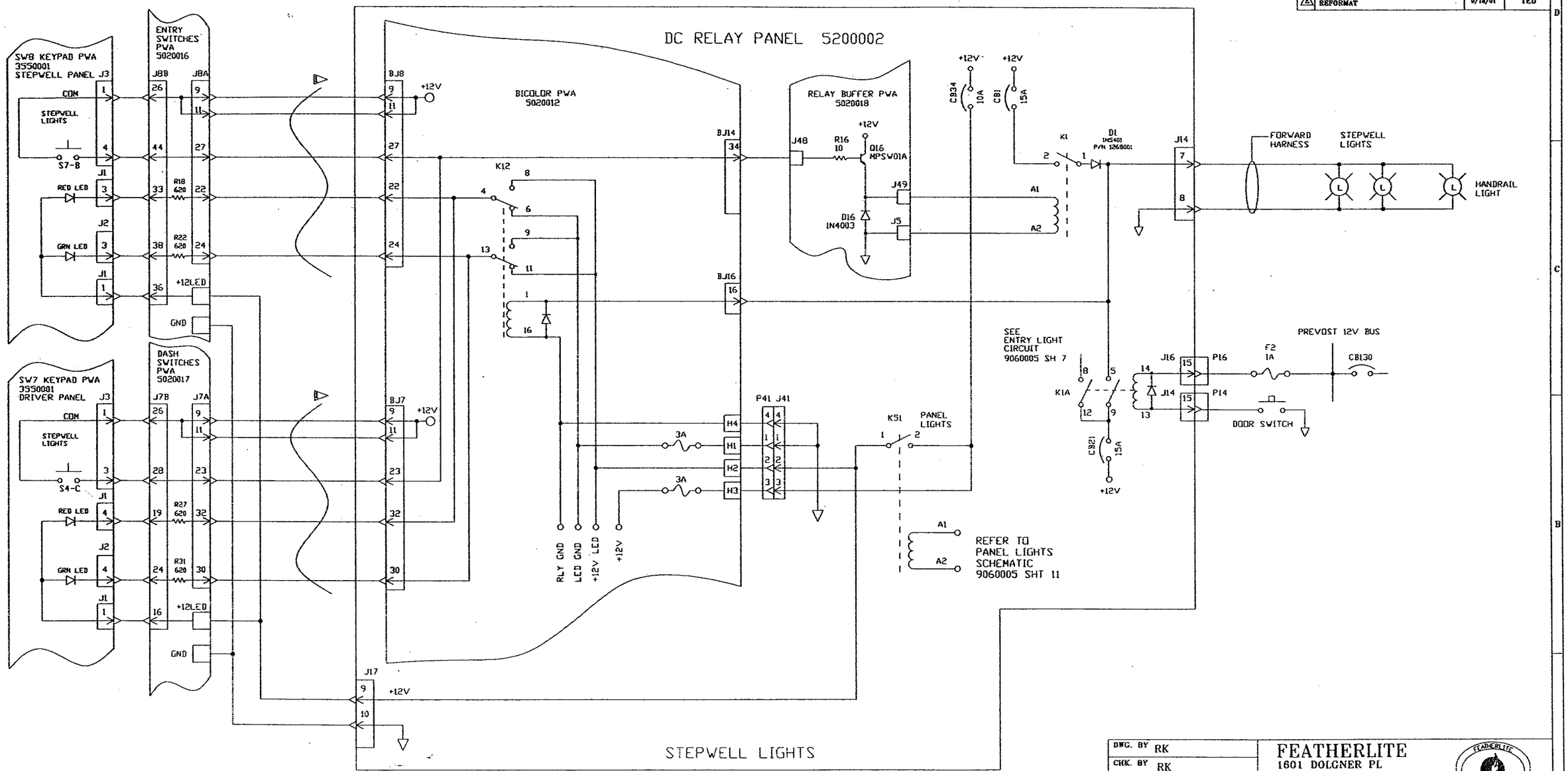

DWG. BY RK	FEATHERLITE 1601 DOLGNER PL SANFORD FLA 32771 TEL. 1-407-323-1120 FAX 1-407-323-1945
CHK. BY RK	
ENGR. BY RK	
CHASSIS: H3	TITLE: SCHEMATIC,STEPWELL-LIGHTS DC-RELAY-PANEL
DATE : 12/12/98	
PROPRIETARY NOTICE: THIS DOCUMENT AND THE INFORMATION DISCLOSED ARE CONFIDENTIAL AND PROPRIETARY TO FEATHERLITE. DISCLOSURE OF SUCH INFORMATION IS EXPRESSLY FORBIDDEN WITHOUT OUR PRIOR WRITTEN PERMISSION	SCALE: NONE / DRAWING NO.: 9060005 / REV E / DRAWING FILE # 9060005-9E.DWG / SHEET: 9 OF —

NOTE —

WAVY LINE INDICATES RIBBON CABLE

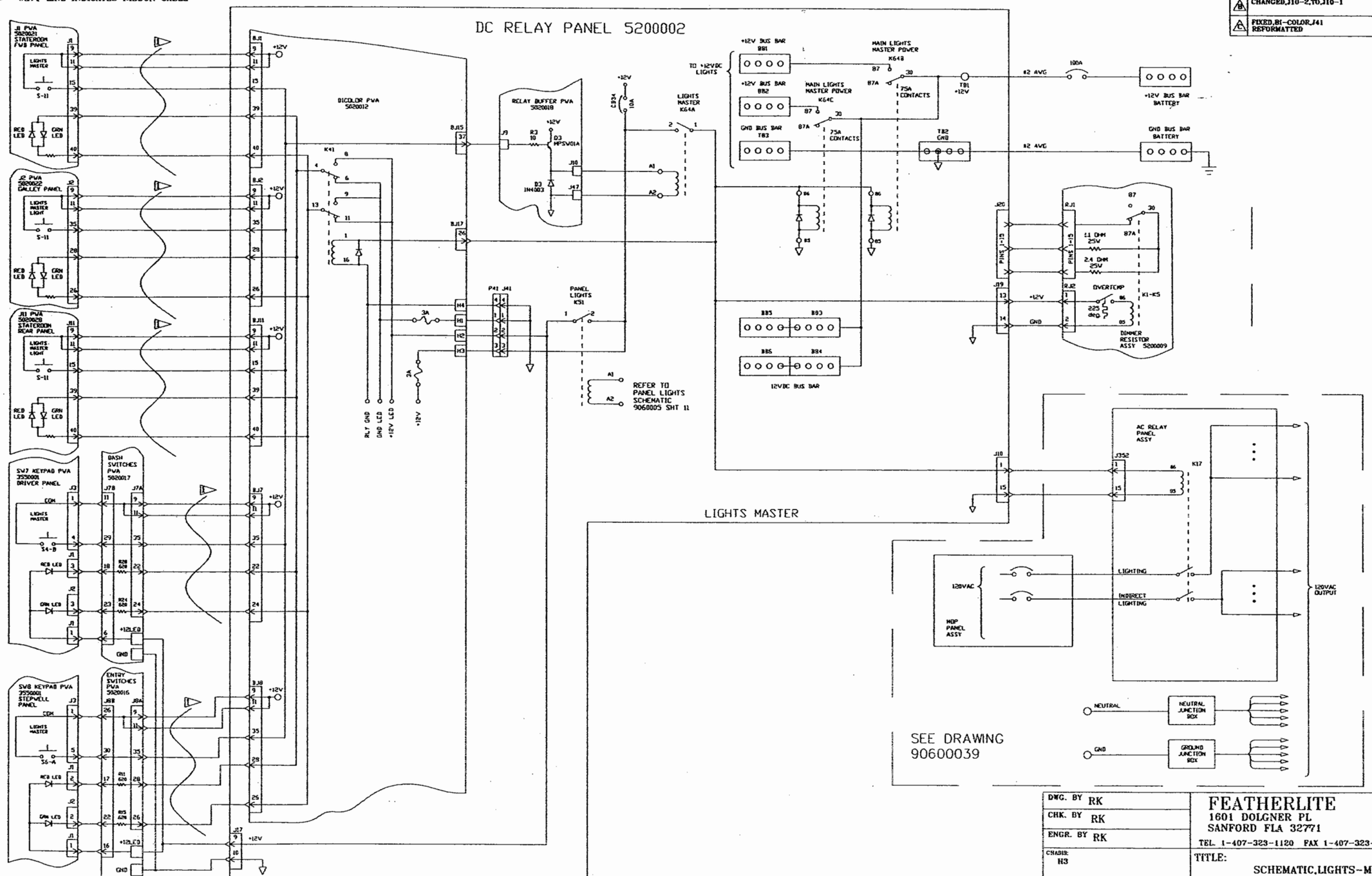

REVISIONS			
REV.	DESCRIPTION	DATE	APPROVAL
A	ADDED,BB3,BB4,BB5,BB6	3/22/00	HAK
B	CHANGED,J10-2,TO,J10-1	6/12/00	HAK
C	FIXED,BI-COLOR,J41 REFORMATTED	9/10/01	TED

DWG. BY RK

CHK. BY RK

ENGR. BY RK

CHASIS: H3

DATE : 3/22/00

PROPRIETARY NOTICE:

THIS DOCUMENT AND THE INFORMATION DISCLOSED ARE CONFIDENTIAL AND PROPRIETARY TO FEATHERLITE. DISCLOSURE OF SUCH INFORMATION IS EXPRESSLY FORBIDDEN WITHOUT OUR PRIOR WRITTEN PERMISSION

FEATHERLITE
1601 DOLGNER PL
SANFORD FLA 32771
TEL. 1-407-323-1120 FAX 1-407-323-1945

TITLE:

SCHEMATIC,LIGHTS-MASTER
DC-RELAY-PANEL

SCALE: NONE

DRAWING NO.: 9060005

REV C

DRAWING FILE # 9060005-10C.DWG

SHEET: 10 OF –

NOTE — WAVY LINES INDICATE RIBBON CABLE.

DC RELAY PANEL 5200002

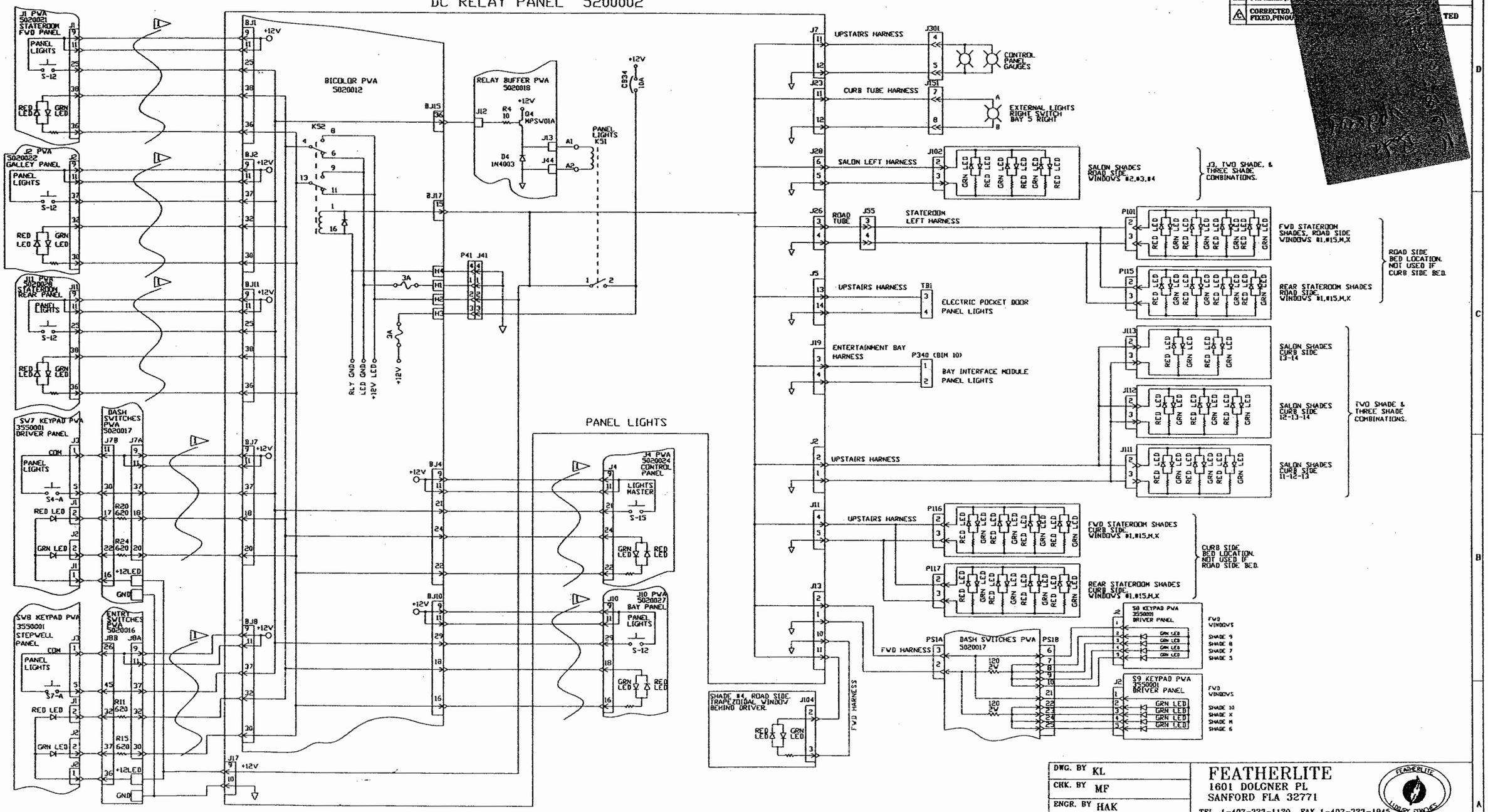

REVISIONS			
REV.	DESCRIPTION	DATE	APPROVAL
A	NEW,SHADE,HARNES,WIRING		HAK
B	CHANGED,J114,TO,J113 PARALLED,J		KL
C	CORRECTED, FIXED,PINOU		TED

DWG. BY KL
CHK. BY MF
ENGR. BY HAK
CHASIS: H3
DATE : 3/21/00

PROPRIETARY NOTICE:
THIS DOCUMENT AND THE INFORMATION DISCLOSED ARE CONFIDENTIAL AND PROPRIETARY TO FEATHERLITE. DISCLOSURE OF SUCH INFORMATION IS EXPRESSLY FORBIDDEN WITHOUT OUR PRIOR WRITTEN PERMISSION

FEATHERLITE
1601 DOLGNER PL
SANFORD FLA 32771
TEL. 1-407-323-1120 FAX 1-407-323-1945

TITLE:
SCHEMATIC,PANEL-LIGHTS,
DC-RELAY,PANEL

SCALE: NONE
DRAWING NO.: 9060005
DRAWING FILE # 9060005-11C.DWG
SHEET: 11 OF —
REV C

NOTE — INTERPRET ALL DRAWINGS IN ACCORDANCE WITH ANSI Y14.5-1982

WAVY LINE INDICATES RIBBON CABLE

REVISIONS			
REV.	DESCRIPTION	DATE	APPROVAL
A	DOUBLE RELAY ACCENT LIGHTS	3/16/00	HAK
B	REDRAWN	3/22/00	HAK
C	ADDED GALLEY LEFT WORK LIGHTS ZONE B-2 REFORMATTED SWAPPED PINOUT P41 BICOLOR BD.	07/27/01	TED

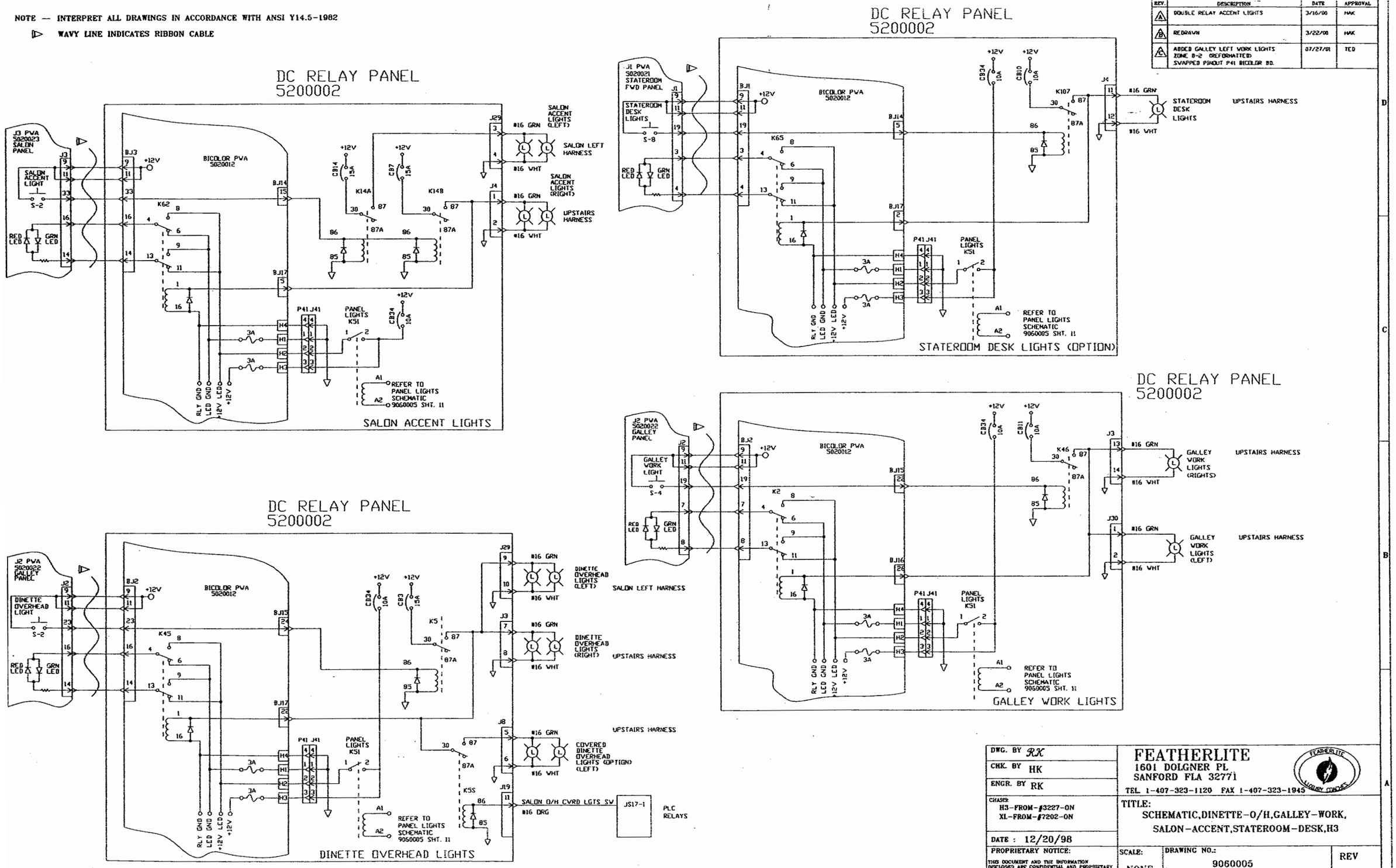

DWG. BY RK	FEATHERLITE 1601 DOLGNER PL SANFORD FLA 32771 TEL. 1-407-323-1120 FAX 1-407-323-1945	
CHK. BY HK		
ENGR. BY RK		
CHASSIS: H3-FROM-#3227-ON XL-FROM-#7202-ON	TITLE: SCHEMATIC,DINETTE-O/H,GALLEY-WORK, SALON-ACCENT,STATEROOM-DESK,H3	
DATE : 12/20/98		
PROPRIETARY NOTICE: THIS DOCUMENT AND THE INFORMATION DISCLOSED ARE CONFIDENTIAL AND PROPRIETARY TO FEATHERLITE. DISCLOSURE OF SUCH INFORMATION IS EXPRESSLY FORBIDDEN WITHOUT OUR PRIOR WRITTEN PERMISSION	SCALE: NONE	DRAWING NO.: 9060005
	DRAWING FILE # 9060005-12C.DWG	SHEET: 12 OF -
		REV C

NOTE — INTERPRET ALL DRAWINGS IN ACCORDANCE WITH ANSI Y14.5-1982
WAVY LINE INDICATES RIBBON CABLE

REVISIONS			
REV.	DESCRIPTION	DATE	APPROVAL
A	ADDED-REAR-WORK-LIGHTS ZONE-C2--(REFORMATTED) SWAPPED.PINOUT.P41.BICOLOR.BD.	07/26/91	TED
B	CORRECTED REAR WORK LIGHT PIN #'S AND CONNECTOR #. BAY LIGHTS DEFEAT CHANGES JULY 2003	8/1/03	MJF

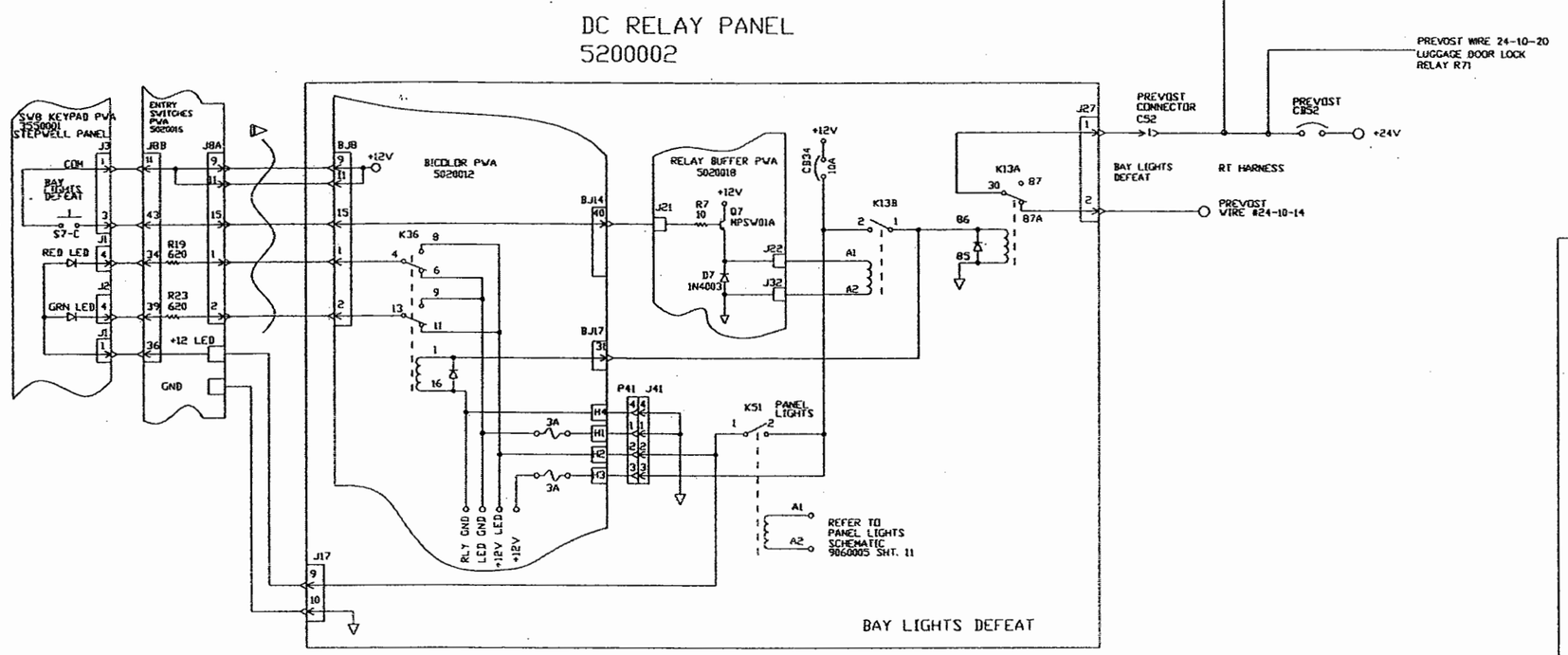

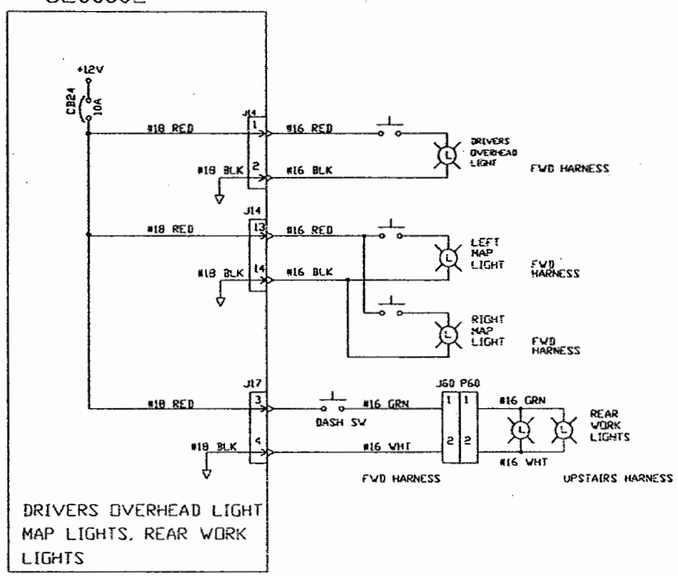

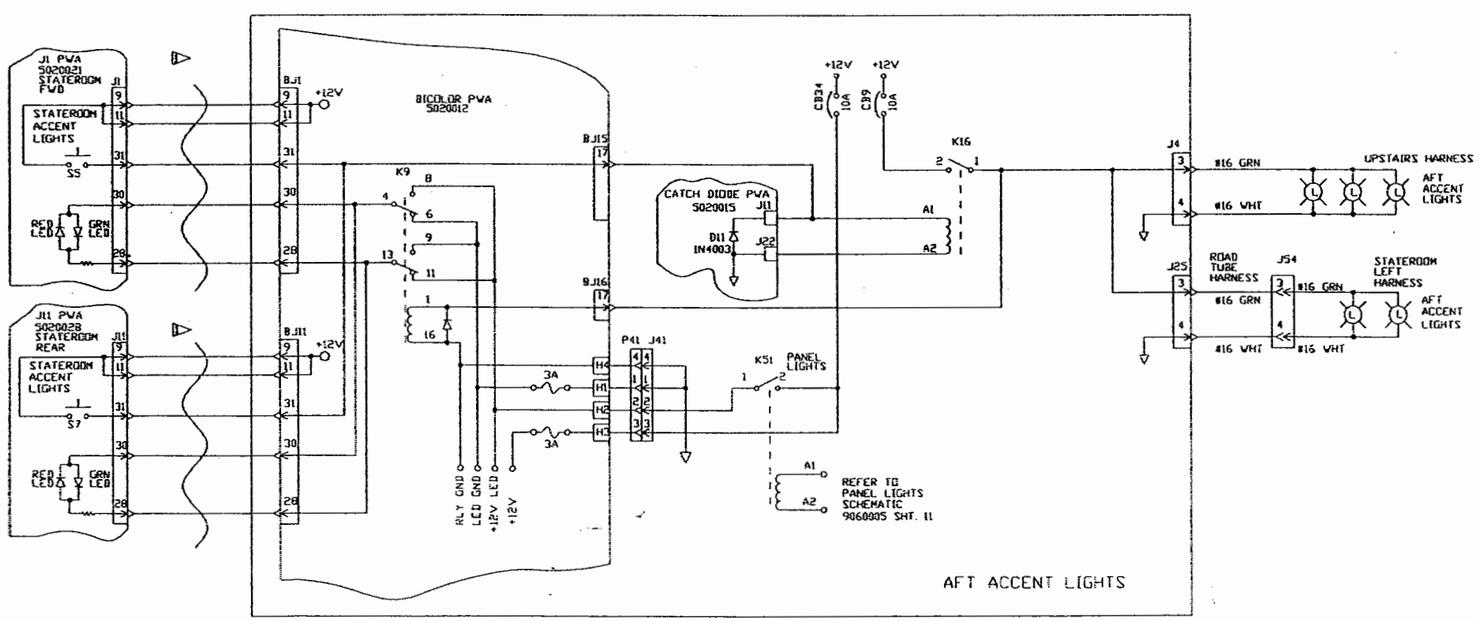

DC RELAY PANEL
5200002

QTY	ITEM	PART NUMBER	DESCRIPTION	MATERIAL STOCK SIZE

DWG. BY RK
CHK. BY
ENGR. BY RK
CHASSIS: H3-FROM-#3227-ON XL-FROM-#7202-ON
DATE : 1/11/99

FEATHERLITE
1601 DOLGNER PL
SANFORD FLA 32771
TEL. 1-407-323-1120 FAX 1-407-323-1045

TITLE:
SCHEM,DRVR-O/H-LIGHTS-DEFEAT,MAP-LIGHTS STATEROOM-ACCENT-LIGHTS,DC-RLY-PANEL,H3

PROPRIETARY NOTICE:
THIS DOCUMENT AND THE INFORMATION DISCLOSED ARE CONFIDENTIAL AND PROPRIETARY TO FEATHERLITE. DISCLOSURE OF SUCH INFORMATION IS EXPRESSLY FORBIDDEN WITHOUT OUR PRIOR WRITTEN PERMISSION

SCALE: NONE
DRAWING NO.: 9060005
REV B
DRAWING FILE # 9060005-13B.DWG
SHEET: 13 OF -

NOTE — INTERPRET ALL DRAWINGS IN ACCORDANCE WITH ANSI Y14.5-1982

▷ WAVY LINE INDICATES RIBBON CABLE

DC RELAY PANEL
5200002

REVISIONS			
REV.	DESCRIPTION	DATE	APPROVAL
A	CHANGED-ROAD-TUBE TO-UPSTAIRS	3/21/00	KL
B	DELETED-XL-REFERENCES ZONE-C3 SWAPPED,PINOUT,P41,BICOLOR.BD.	07/27/01	TED

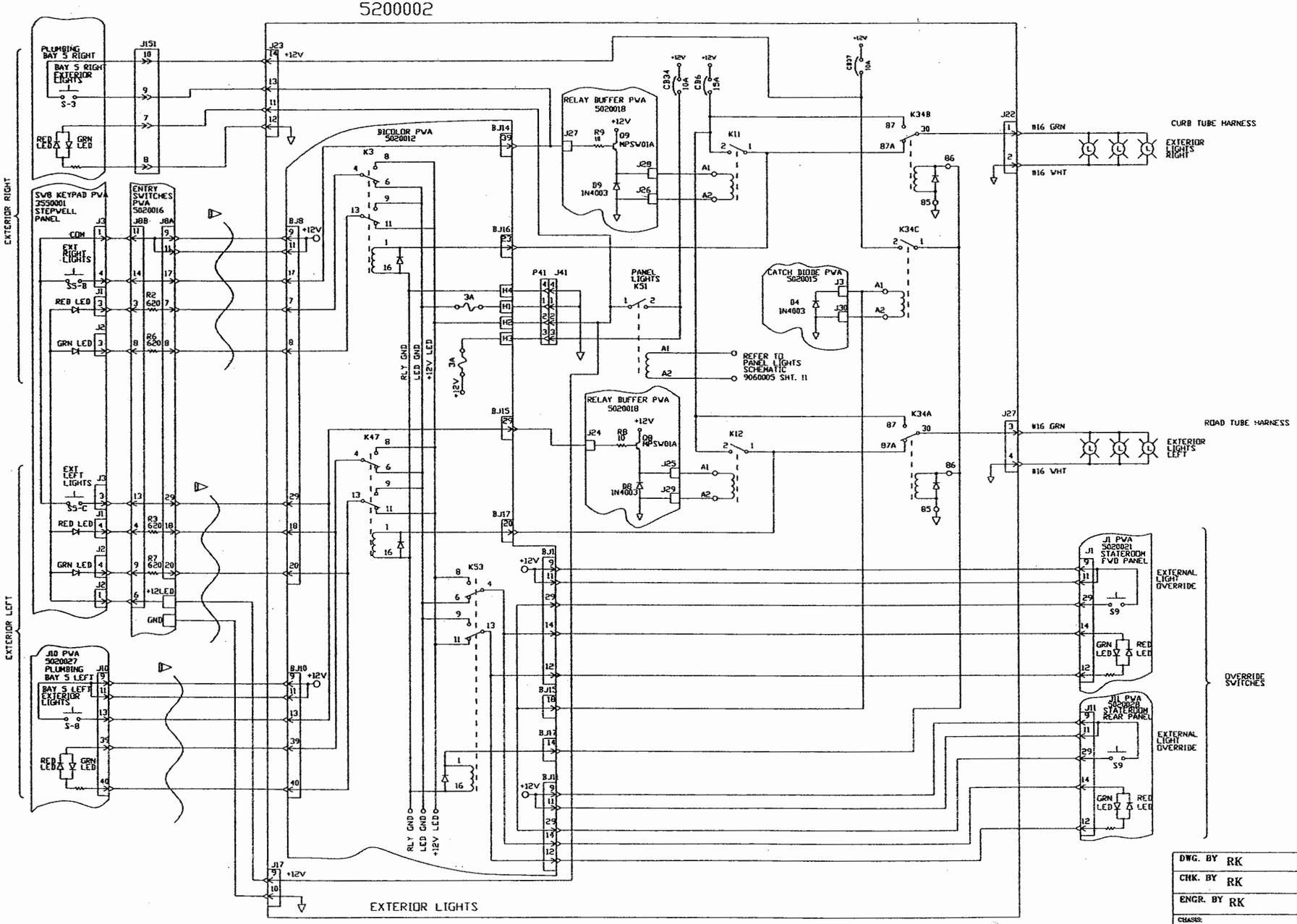

DWG. BY RK	FEATHERLITE
CHK. BY RK	1601 DOLGNER PL
ENGR. BY RK	SANFORD FLA 32771
CHASIS: H3-FROM-#3277-ON XL-FROM-#7202-ON	TEL. 1-407-323-1120 FAX 1-407-323-1945
DATE : 1/14/99	TITLE: SCHEMATIC,EXTERIOR-LIGHTS DC-RELAY-PANEL,H3
PROPRIETARY NOTICE: THIS DOCUMENT AND THE INFORMATION DISCLOSED ARE CONFIDENTIAL AND PROPRIETARY TO FEATHERLITE. DISCLOSURE OF SUCH INFORMATION IS EXPRESSLY FORBIDDEN WITHOUT OUR PRIOR WRITTEN PERMISSION	SCALE: NONE · DRAWING NO.: 9060005 · REV B · DRAWING FILE # 9060005-14B.DWG · SHEET: 14 OF -

NOTE —

WAVY LINES INDICATE RIBBON CABLES

REVISIONS			
REV.	DESCRIPTION	DATE	APPROVAL
A	REMOVE,WORK-LGTS,ADD,SPOTLIGHT	3/17/00	HAK
B	ADD,CB19,TO,CIRCUIT,CHANGE WIRING,CODE,COLORS	10/18/00	LMG
C	FIX,BI-COLOR,J41 REFORMAT	09/18/01	TED

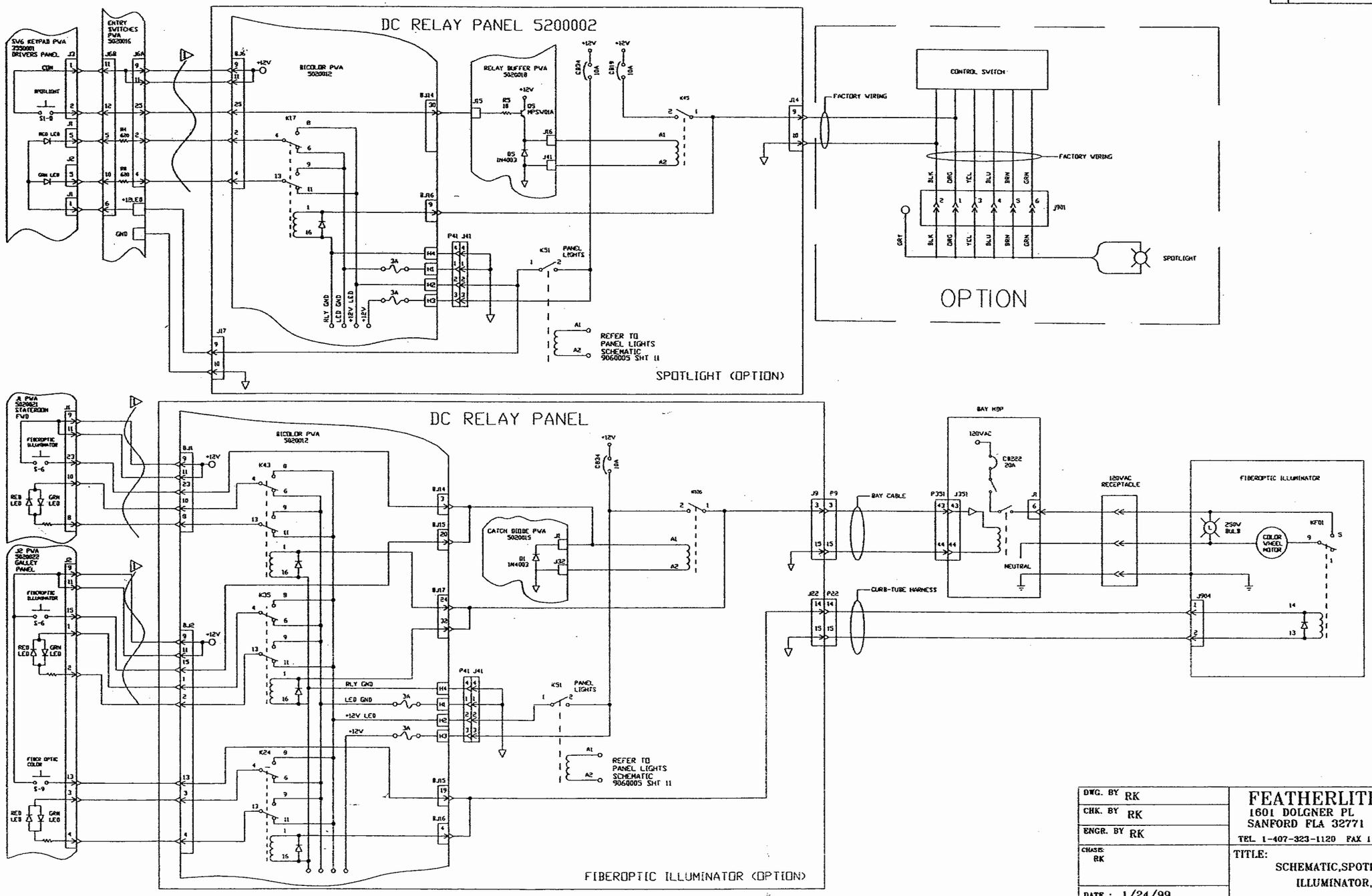

DWG. BY RK

CHK. BY RK

ENGR. BY RK

CHASIS: RK

DATE : 1/24/99

PROPRIETARY NOTICE:

THIS DOCUMENT AND THE INFORMATION DISCLOSED ARE CONFIDENTIAL AND PROPRIETARY TO FEATHERLITE. DISCLOSURE OF SUCH INFORMATION IS EXPRESSLY FORBIDDEN WITHOUT OUR PRIOR WRITTEN PERMISSION

FEATHERLITE
1601 DOLGNER PL
SANFORD FLA 32771
TEL. 1-407-323-1120 FAX 1-407-323-1945

TITLE: SCHEMATIC,SPOTLIGHT,FIBEROPTIC ILLUMINATOR,COLOR-WHEEL

SCALE: NONE

DRAWING NO.: 9060005

REV C

DRAWING FILE # 9060005-15C.DWG

SHEET: 15 OF —

NOTE — INTERPRET ALL DRAWINGS IN ACCORDANCE WITH ANSI Y14.5-1982
▷ WAVY LINE INDICATES RIBBON CABLE.

REVISIONS			
REV.	DESCRIPTION	DATE	APPROVAL
A	CHANGED-AC-PIN-OUTS	6/28/00	HAK
B	CORRECTED-RED/GRN-BI-COLOR AND-P351-CONNECTOR	8/17/01	TED

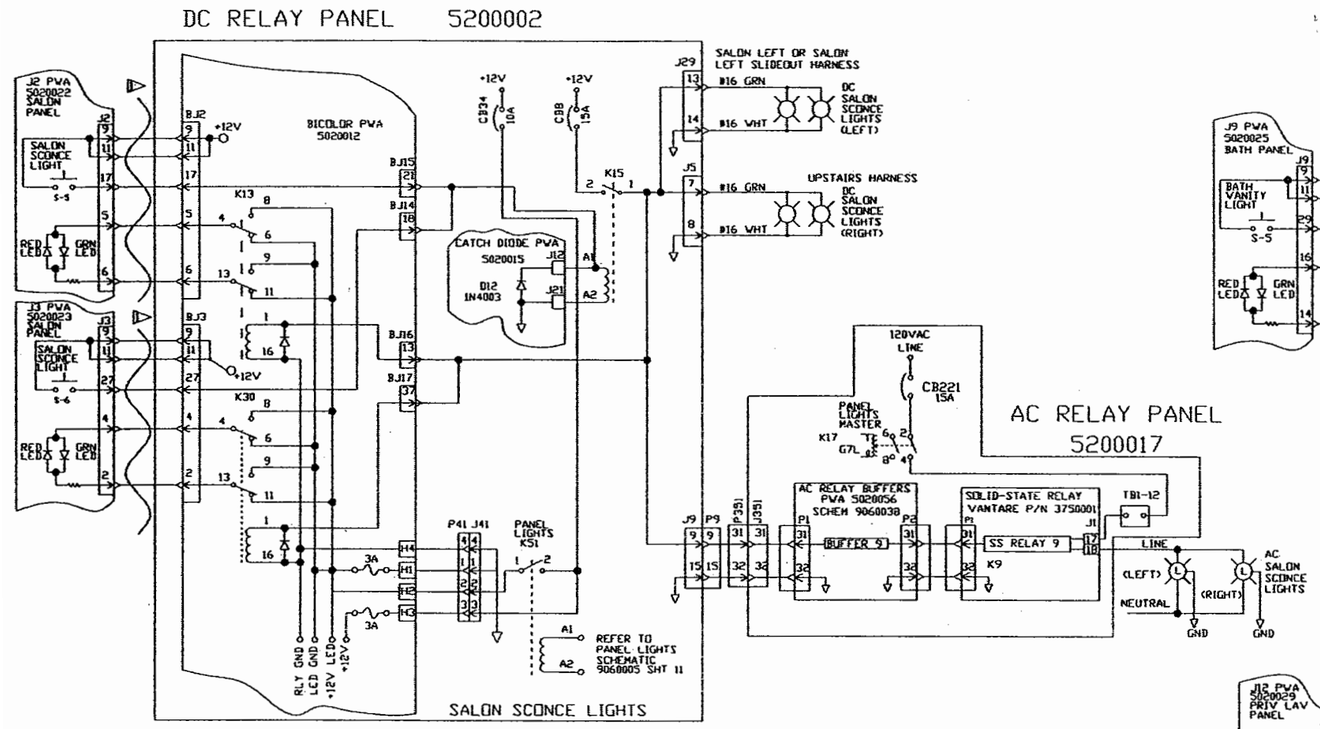

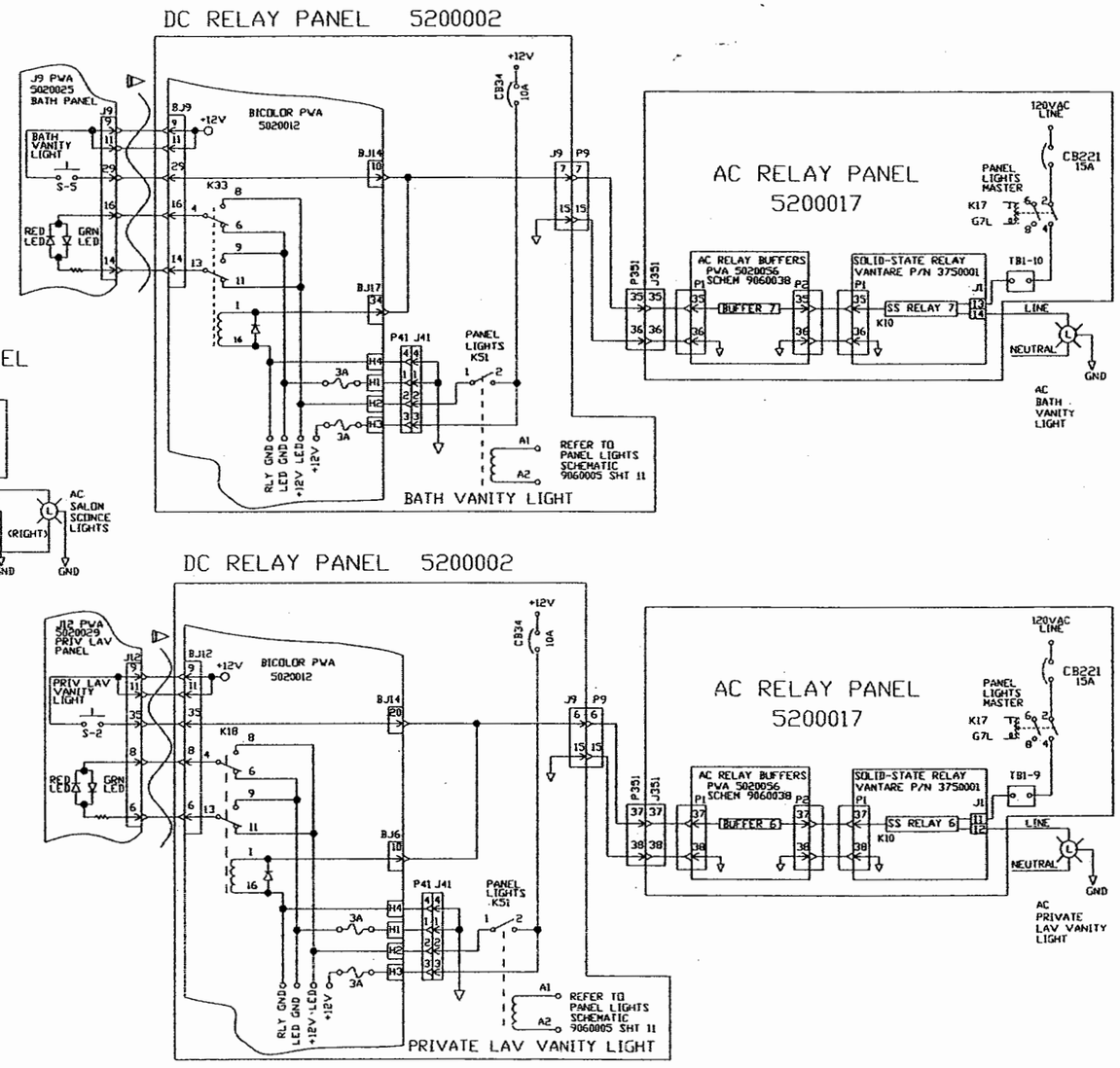

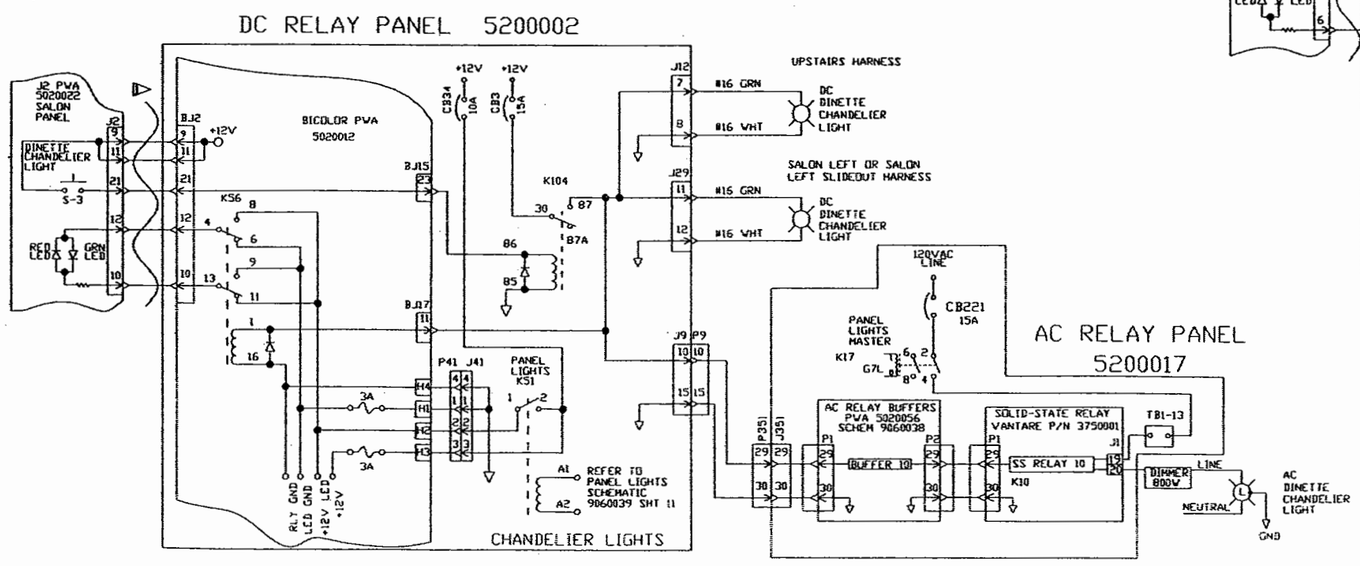

DWG. BY RK	FEATHERLITE
CHK. BY HAK	1601 DOLGNER PL.
ENGR. BY RK	SANFORD FLA 32771
CHASSIS: H3-FROM-#3227-ON XL-FROM-#7202-ON	TEL 1-407-323-1120 FAX 1-407-323-1945
DATE : 1/24/99	TITLE: SCHEM,CHANDELIER,SALON-SCONCE BATH-VANITY,PRIV-LAV-VANITY,LIGHTS
PROPRIETARY NOTICE: THIS DOCUMENT AND THE INFORMATION DISCLOSED ARE CONFIDENTIAL AND PROPRIETARY TO FEATHERLITE. DISCLOSURE OF SUCH INFORMATION IS EXPRESSLY FORBIDDEN WITHOUT OUR PRIOR WRITTEN PERMISSION	SCALE: NONE · DRAWING NO.: DRAWING# · DRAWING FILE # 906005-16B.DWG · SHEET: 16OF — · REV B

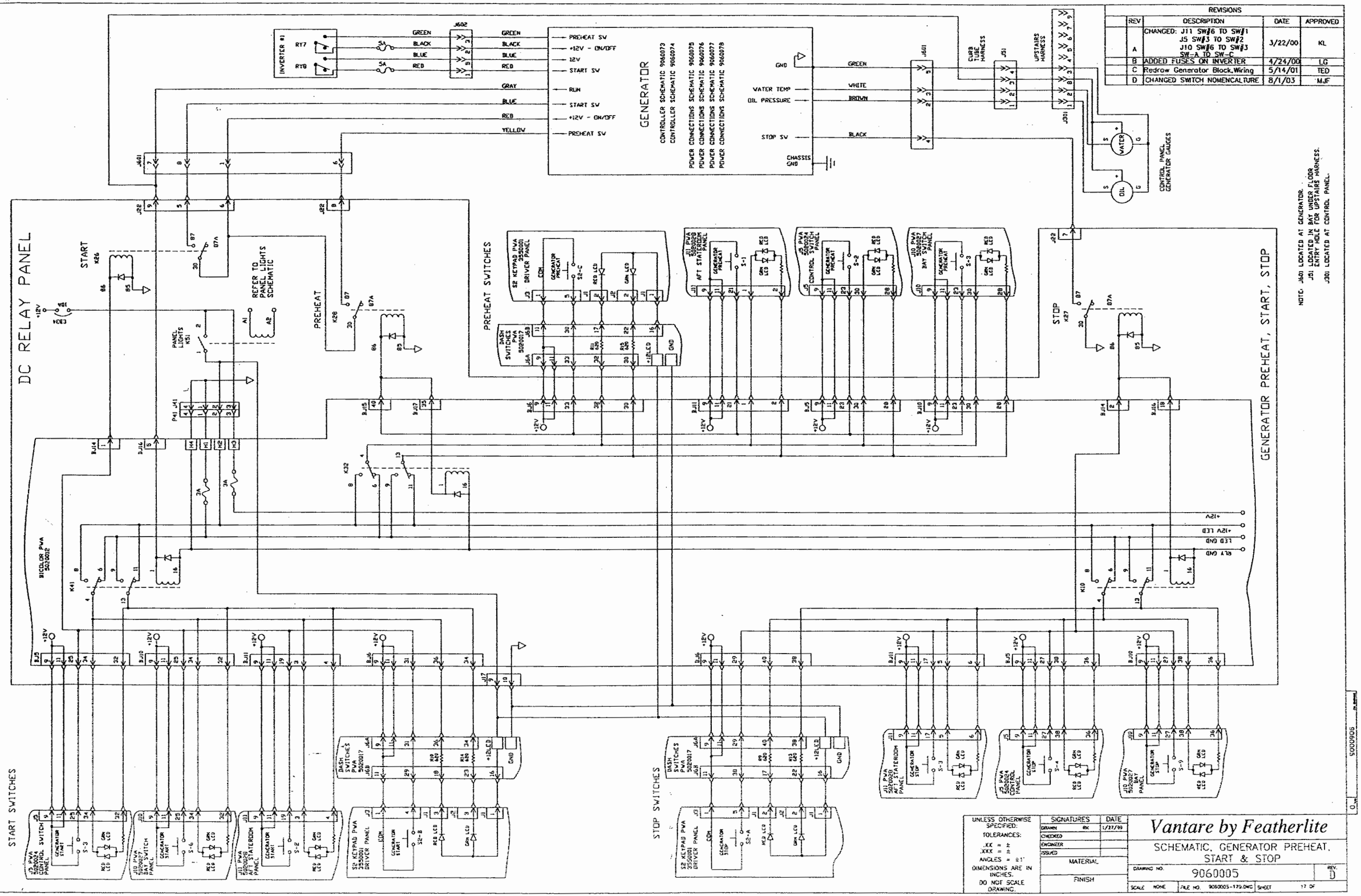

REVISIONS			
REV	DESCRIPTION	DATE	APPROVED
A	CHANGED: J11 SW#6 TO SW#1 J5 SW#3 TO SW#2 J10 SW#6 TO SW#3 SW-A TO SW-C	3/22/00	KL
B	ADDED FUSES ON INVERTER	4/24/00	LG
C	Redrow Generator Block.Wiring	5/14/01	TED
D	CHANGED SWITCH NOMENCALTURE	8/1/03	MJF

UNLESS OTHERWISE SPECIFIED:
TOLERANCES:
.XX = ±
.XXX = ±
ANGLES = ±1°
DIMENSIONS ARE IN INCHES.
DO NOT SCALE DRAWING.

SIGNATURES		DATE
DRAWN	RK	1/27/99
CHECKED		
ENGINEER		
ISSUED		
MATERIAL		
FINISH		

Vantare by Featherlite

SCHEMATIC, GENERATOR PREHEAT, START & STOP

DRAWING NO. 9060005 REV. D

SCALE NONE FILE NO. 9060005-179.DWG SHEET 17 OF

NOTE — INTERPRET ALL DRAWINGS IN ACCORDANCE WITH ANSI Y14.5-1982

1 WAVY LINE INDICATES RIBBON CABLE

2 MOUNTED IN A UL ENCLOSURE

REVISIONS			
REV.	DESCRIPTION	DATE	APPROVAL
A	CHANGE-OUTPUT-PIN-FROM J9-3,TO,J10-6	8/12/98	LMG
B	REFORMATTED,CORRECTED,AC PORTION,P352,AND-PANEL SWAPPED,PINOUT,P41,BI-COLOR,BD	8/20/01	TED

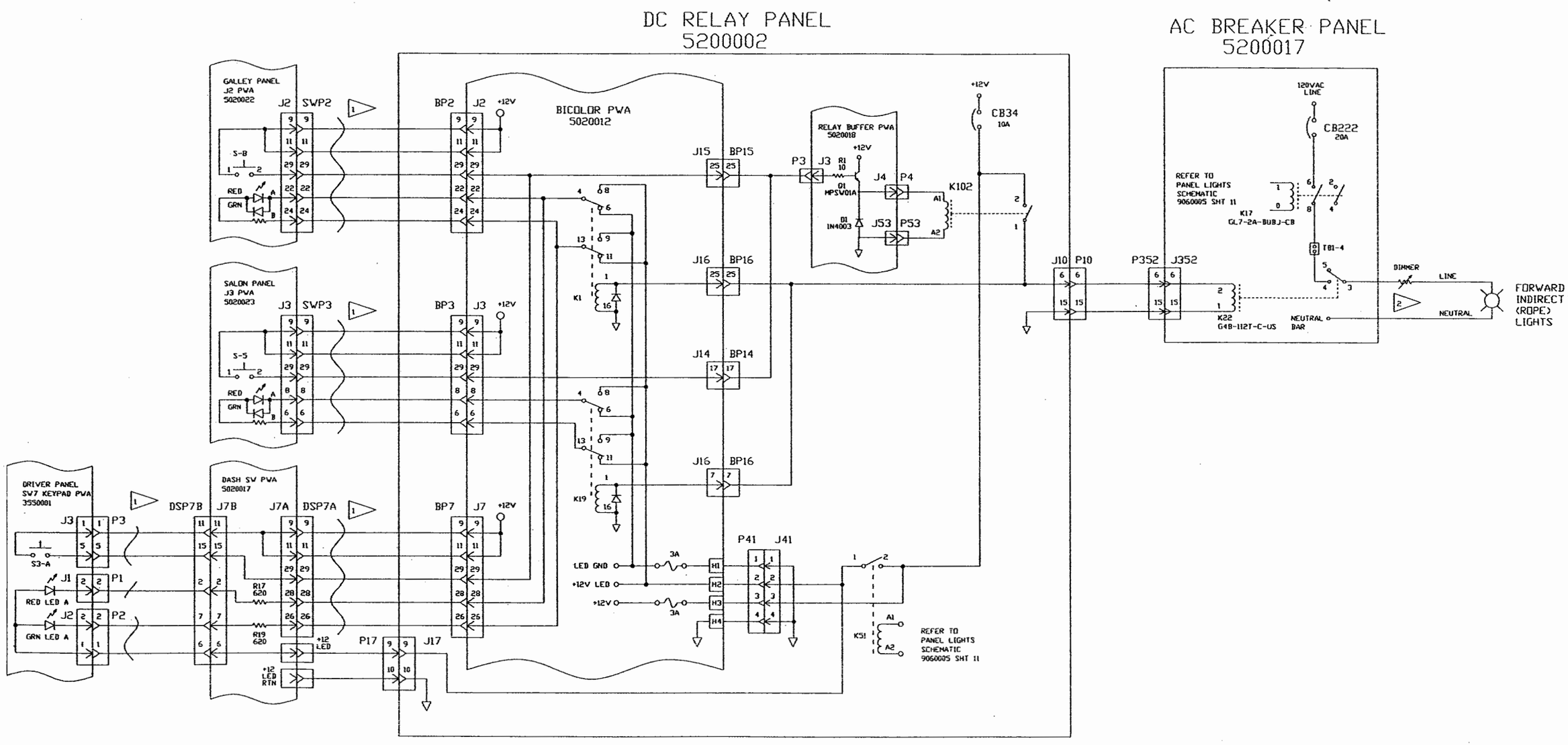

DWG. BY RK	FEATHERLITE 1601 DOLGNER PL SANFORD FLA 32771 TEL. 1-407-323-1120 FAX 1-407-323-1945
CHK. BY HAK	
ENGR. BY RK	
CHASIS: H3-FROM-#3227-ON XL-FROM-#7202-ON	TITLE: SCHEMATIC,FORWARD INDIRECT,LIGHTS
DATE : 1/24/99	
PROPRIETARY NOTICE: THIS DOCUMENT AND THE INFORMATION DISCLOSED ARE CONFIDENTIAL AND PROPRIETARY TO FEATHERLITE. DISCLOSURE OF SUCH INFORMATION IS EXPRESSLY FORBIDDEN WITHOUT OUR PRIOR WRITTEN PERMISSION	SCALE: NONE DRAWING NO.: 9060005 DRAWING FILE # 906005-18B.DWG SHEET: 18 OF — REV B

NOTE — INTERPRET ALL DRAWINGS IN ACCORDANCE WITH ANSI Y14.5-1982

1 WAVY LINE INDICATES RIBBON CABLE

2 MOUNTED IN UL APPROVED ENCLOSURE

REVISIONS			
REV.	DESCRIPTION	DATE	APPROVAL
A	ENG-MEMO-10101 CHANGE-PRESS-SW-CONFIG	7/20/99	HAK
B	CHANGE-OUTPUT-PINS&PLUG FROM-J8-TO-J10	6/12/00	HAK
C	REFORMATTED,FIX,BI-COLOR UPDATE-AC-PANEL-PORTION	6/21/01	TED

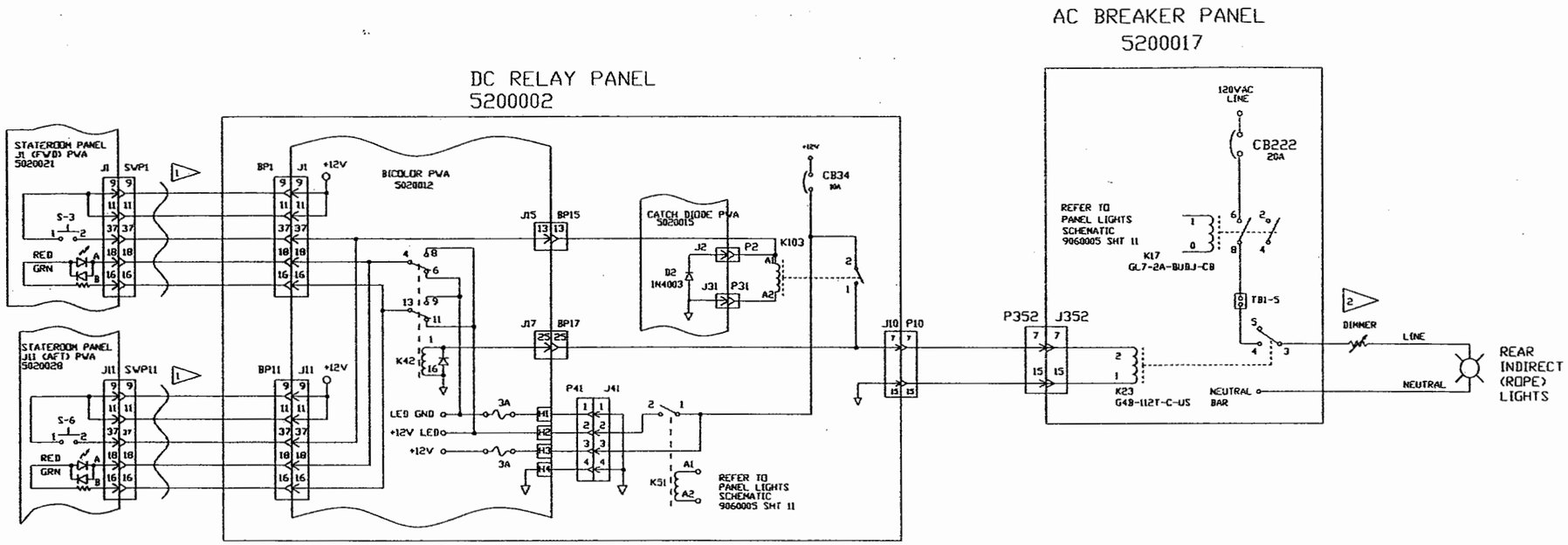

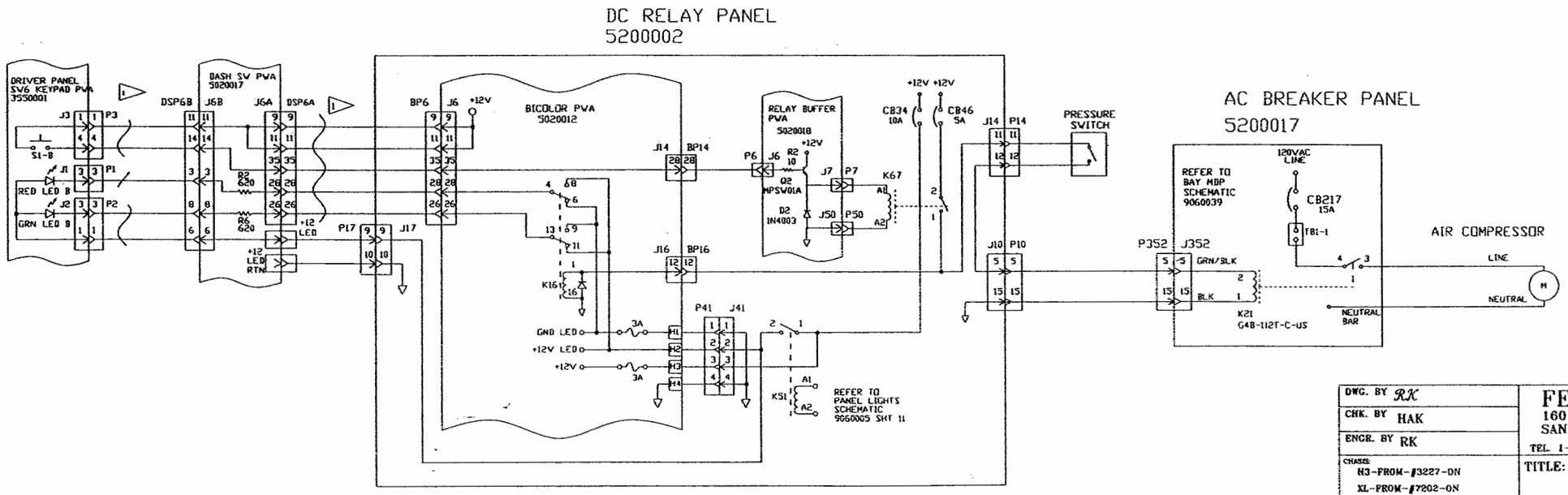

DWG. BY RK	FEATHERLITE 1601 DOLGNER PL SANFORD FLA 32771 TEL 1-407-323-1120 FAX 1-407-323-1945	
CHK. BY HAK		
ENGR. BY RK		
CHASSIS: H3-FROM-#3227-ON XL-FROM-#7202-ON	TITLE: SCHEMATIC,REAR-INDIRECT-LIGHTS AIR-COMPRESSOR	
DATE : 4/16/99		
PROPRIETARY NOTICE: THIS DOCUMENT AND THE INFORMATION DISCLOSED ARE CONFIDENTIAL AND PROPRIETARY TO FEATHERLITE. DISCLOSURE OF SUCH INFORMATION IS EXPRESSLY FORBIDDEN WITHOUT OUR PRIOR WRITTEN PERMISSION	SCALE: NONE	DRAWING NO.: 9060005
	DRAWING FILE # 9060005-19C.DWG	SHEET: 19OF #
		REV C

NOTE — INTERPRET ALL DRAWINGS IN ACCORDANCE WITH ANSI Y14.5-1982
1 WAVY LINE INDICATES RIBBON CABLE

REVISIONS			
REV.	DESCRIPTION	DATE	APPROVAL
A	CHANGE-AC-PINOUTS	8/25/00	LMG
B	REFORMATTED,CORRECTED,AC PORTION,P351,AND-PANEL SWAPPED,PINOUT,P41,BI-COLOR,BD	8/20/01	TED

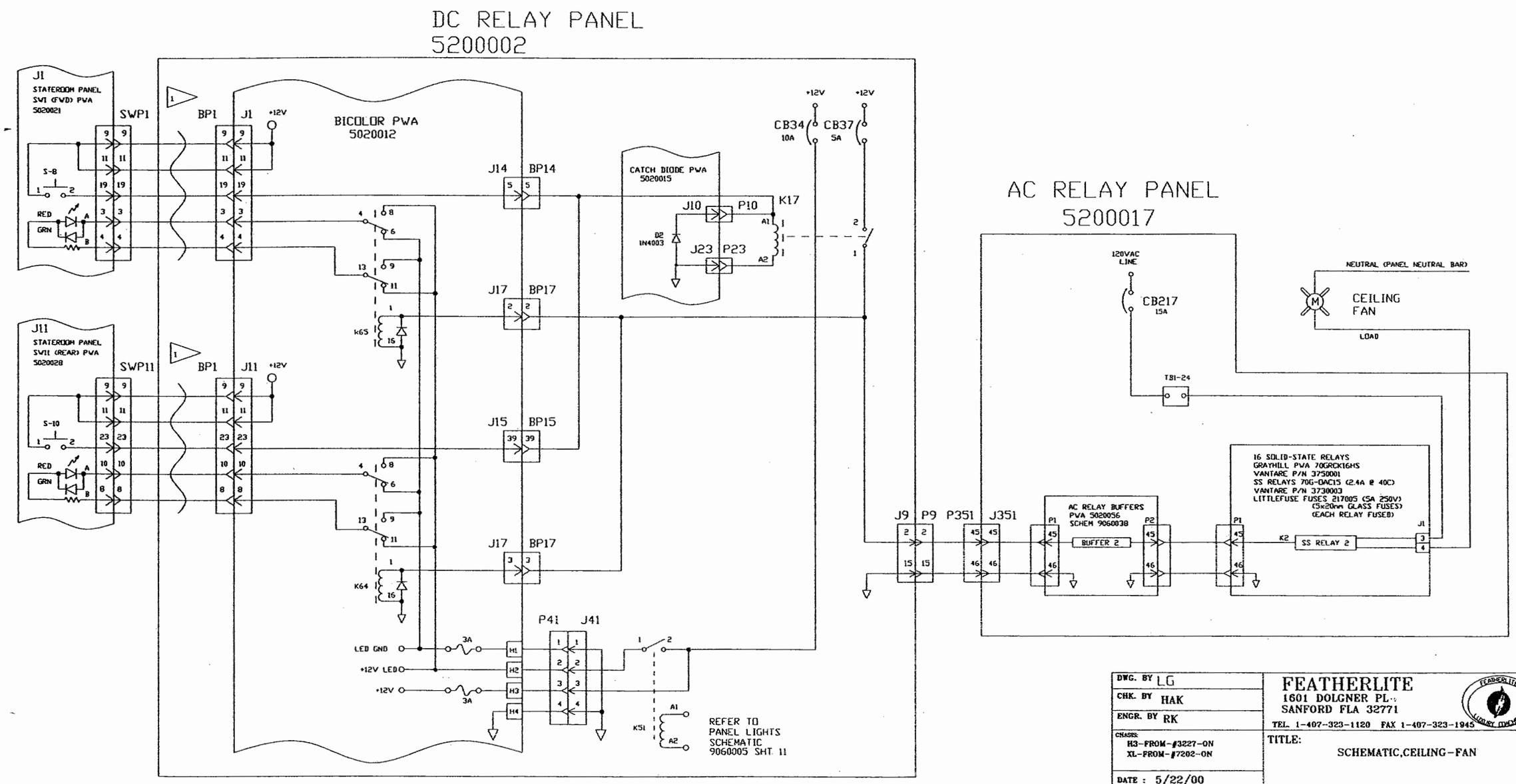

DWG. BY LG	FEATHERLITE 1601 DOLGNER PL. SANFORD FLA 32771 TEL. 1-407-323-1120 FAX 1-407-323-1945	
CHK. BY HAK		
ENGR. BY RK		
CHASSIS: H3-FROM-#3227-ON XL-FROM-#7202-ON	TITLE: SCHEMATIC,CEILING-FAN	
DATE : 5/22/00		
PROPRIETARY NOTICE: THIS DOCUMENT AND THE INFORMATION DISCLOSED ARE CONFIDENTIAL AND PROPRIETARY TO FEATHERLITE. DISCLOSURE OF SUCH INFORMATION IS EXPRESSLY FORBIDDEN WITHOUT OUR PRIOR WRITTEN PERMISSION	SCALE: NONE DRAWING NO.: 9060005 DRAWING FILE # 906005-20B.DWG SHEET: 20 OF —	REV B

NOTE — INTERPRET ALL DRAWINGS IN ACCORDANCE WITH ANSI Y14.5-1982

1 WAVY LINE INDICATES RIBBON CABLE

REVISIONS			
REV.	DESCRIPTION	DATE	APPROVAL
A	CHANGE-OUT-PUT-PINS-FROM J9-10,TO,J10-2	6/12/00	LMG
B	REFORMATTED,FIX-BI-COLOR,P41 REDRAWN,AC-PANEL-PORTION	8/22/01	TED

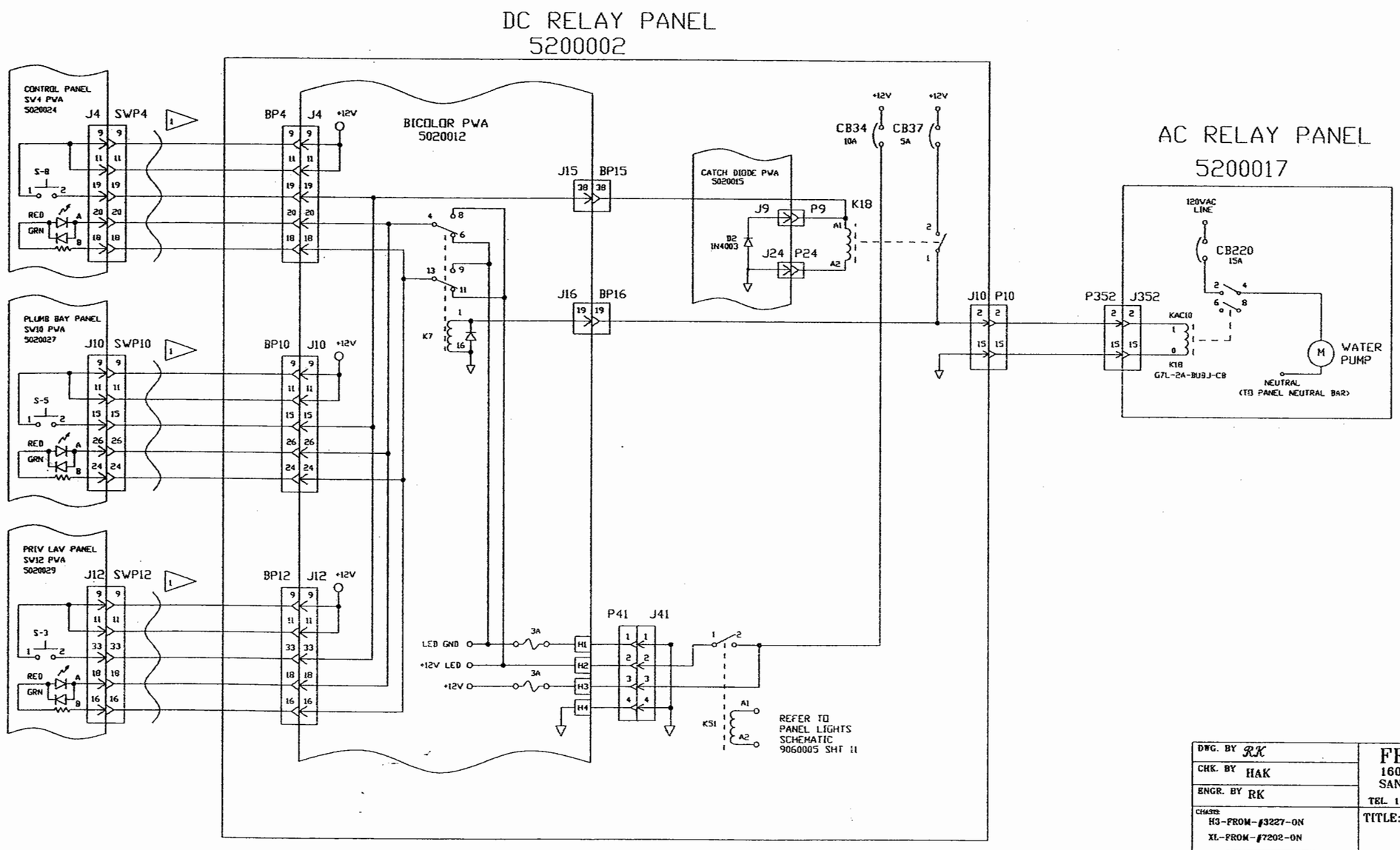

DWG. BY RK

CHK. BY HAK

ENGR. BY RK

CHASIS:
H3-FROM-#3227-ON
XL-FROM-#7202-ON

DATE : 4/16/99

PROPRIETARY NOTICE:

THIS DOCUMENT AND THE INFORMATION DISCLOSED ARE CONFIDENTIAL AND PROPRIETARY TO FEATHERLITE. DISCLOSURE OF SUCH INFORMATION IS EXPRESSLY FORBIDDEN WITHOUT OUR PRIOR WRITTEN PERMISSION

FEATHERLITE
1601 DOLGNER PL
SANFORD FLA 32771
TEL 1-407-323-1120 FAX 1-407-323-1945

TITLE:
SCHEMATIC,WATER-PUMP

SCALE: NONE

DRAWING NO.: 9060005

REV B

DRAWING FILE # 9060005-21B.DWG

SHEET: 21 OF -

REVISIONS			
REV	DESCRIPTION	DATE	APPROVED
–	ORIGINAL RELEASE	4/16/99	HAK

DC RELAY PANEL

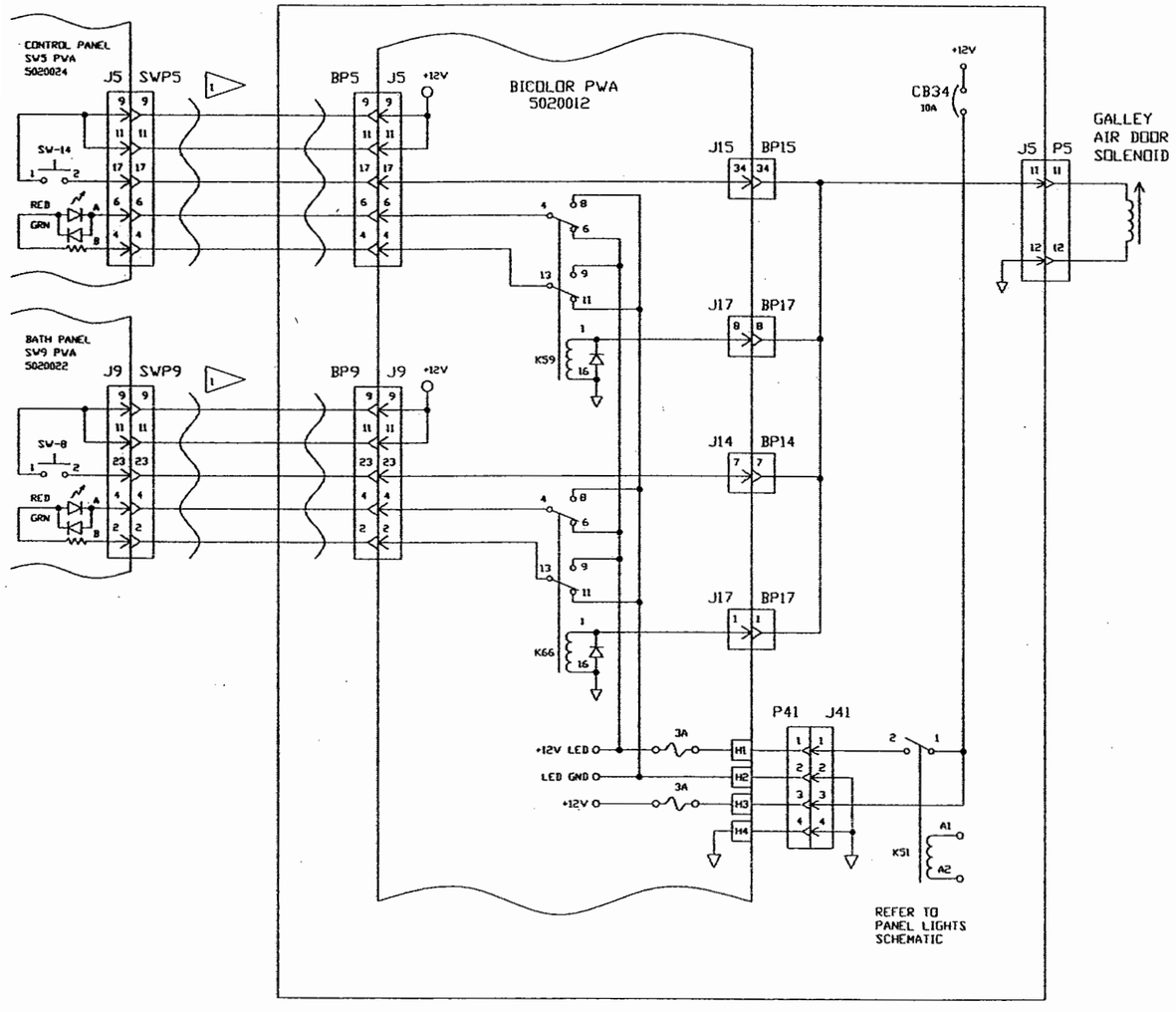

DC RELAY PANEL

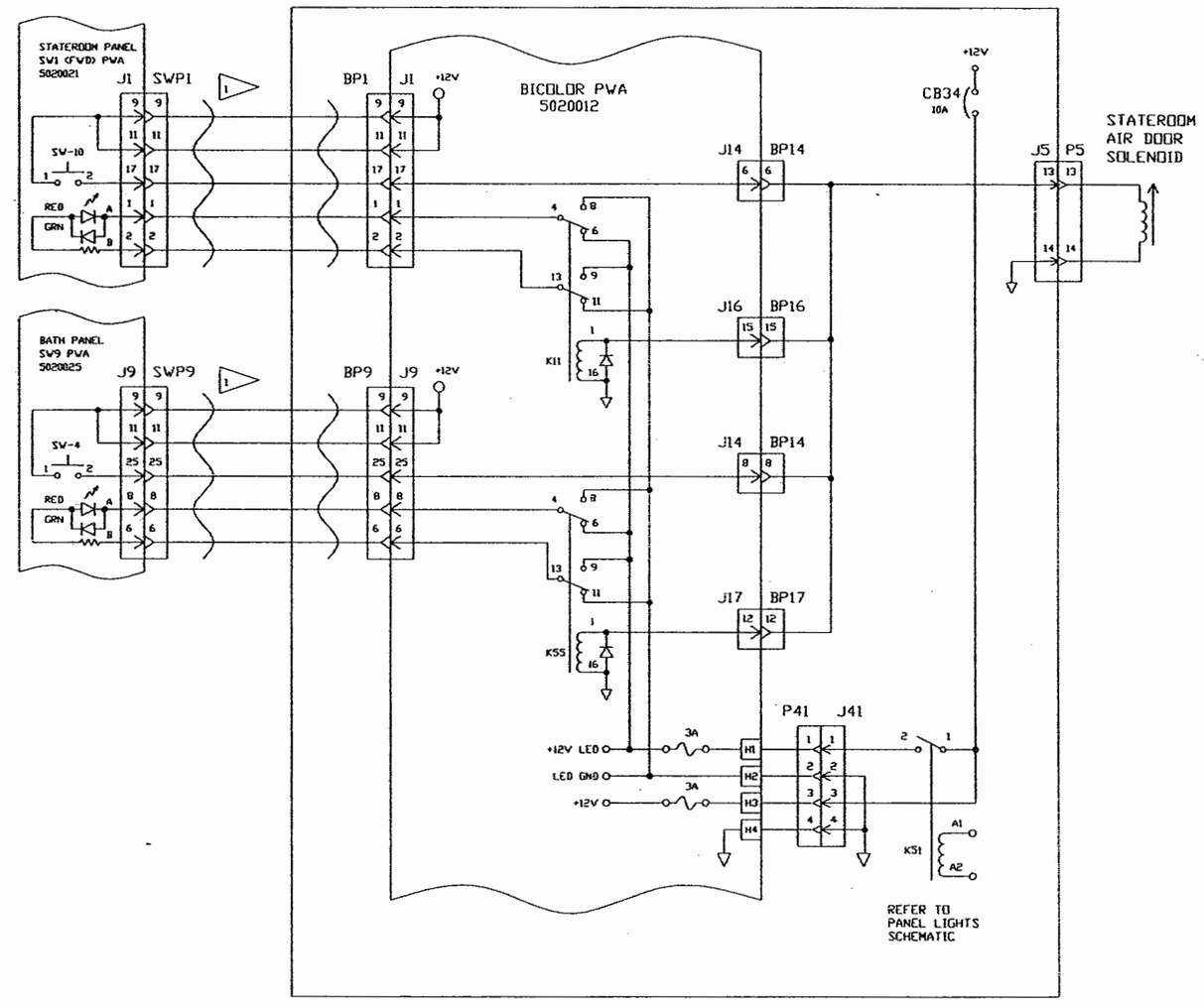

NOTES:

1 WAVY LINE INDICATES RIBBON CABLE

UNLESS OTHERWISE SPECIFIED: TOLERANCES: .XX = ± .XXX = ± ANGLES = ±1° DIMENSIONS ARE IN INCHES. DO NOT SCALE DRAWING.	SIGNATURES	DATE	Vantare by Featherlite
	DRAWN HAK	4/16/99	SCHEMATIC, POCKET DOORS
	CHECKED		
	ENGINEER		
	ISSUED		
	MATERIAL		
	FINISH		

DRAWING NO. 9060005 REV. –

SCALE N/A FILE NO. 9060005-22.DWG SHEET 22

REVISIONS			
REV	DESCRIPTION	DATE	APPROVED
–	ORIGINAL RELEASE	4/16/99	HAK
A	REDRAW, CORRECT PIN NUMBERS	3/20/00	HAK
B	SWITCHED 284A & GND. , ADDED SW. #'s	3/7/03	KSL
C	CORRECTED SWITCH NOMENCLATURE	8/1/03	MJF

DC RELAY PANEL

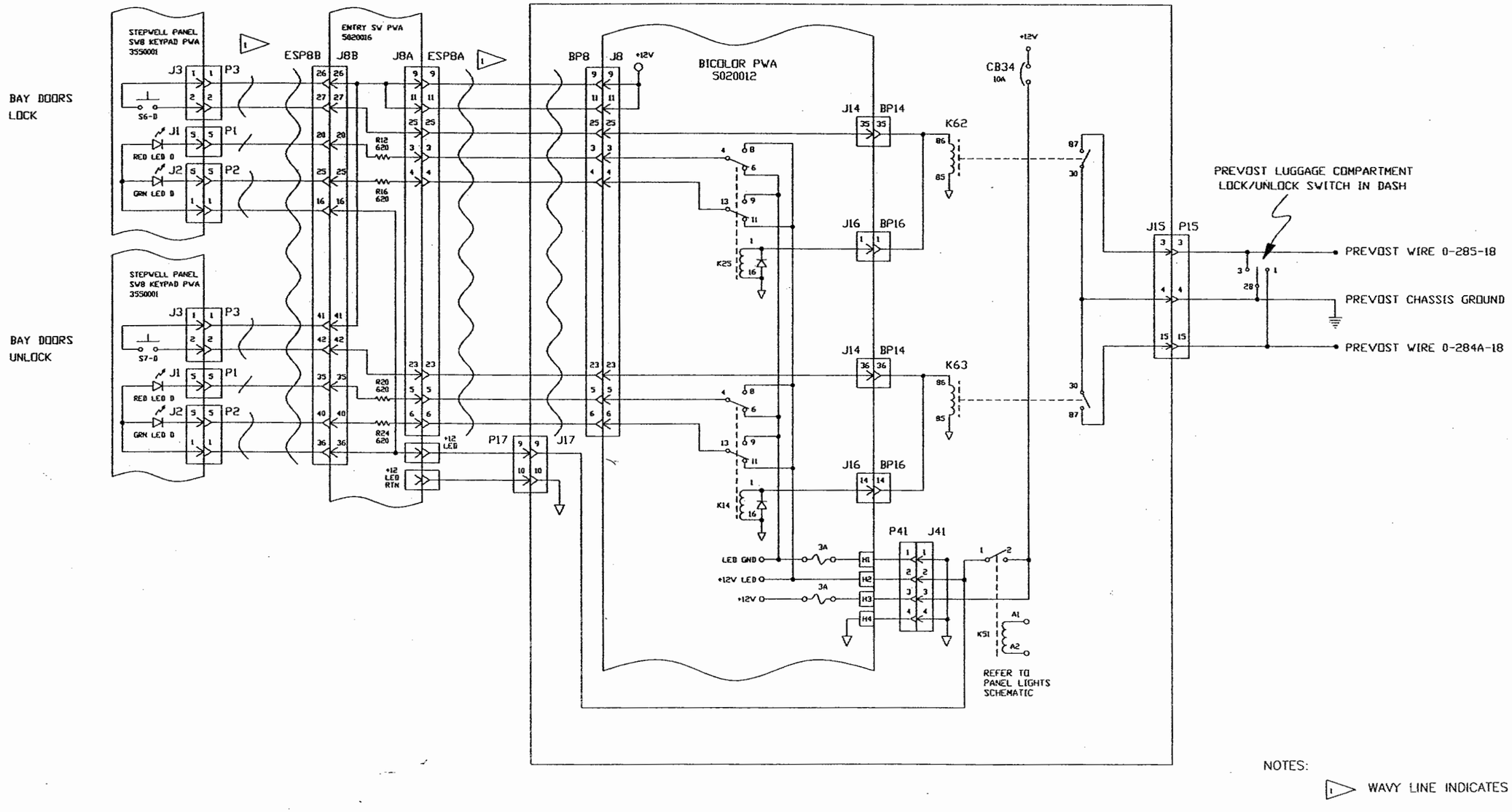

NOTES:

1. WAVY LINE INDICATES RIBBON CABLE

UNLESS OTHERWISE SPECIFIED: TOLERANCES: .XX = ± .XXX = ± ANGLES = ±1° DIMENSIONS ARE IN INCHES. DO NOT SCALE DRAWING.	SIGNATURES	DATE
	DRAWN HAK	4/16/99
	CHECKED	
	ENGINEER	
	ISSUED	
	MATERIAL	
	FINISH	

Vantare by Featherlite

SCHEMATIC, BAY DOORS LOCK, BAY DOORS UNLOCK, H3

DRAWING NO. 9060005 REV. C

SCALE N/A FILE NO. 9060005-23B.DWG SHEET 23

9060005

NOTE —

1 WAVY LINE INDICATES RIBBON CABLE

REVISIONS			
REV.	DESCRIPTION	DATE	APPROVAL
	ORIGINAL-RELEASE	4/18/99	HAK
A	NEW-DUMP-VALVE	3/15/00	HAK
B	RE-INSTALL OLD-DUMP-VALVE CORRECT-BI-COLOR-J41	8/06/01	TED

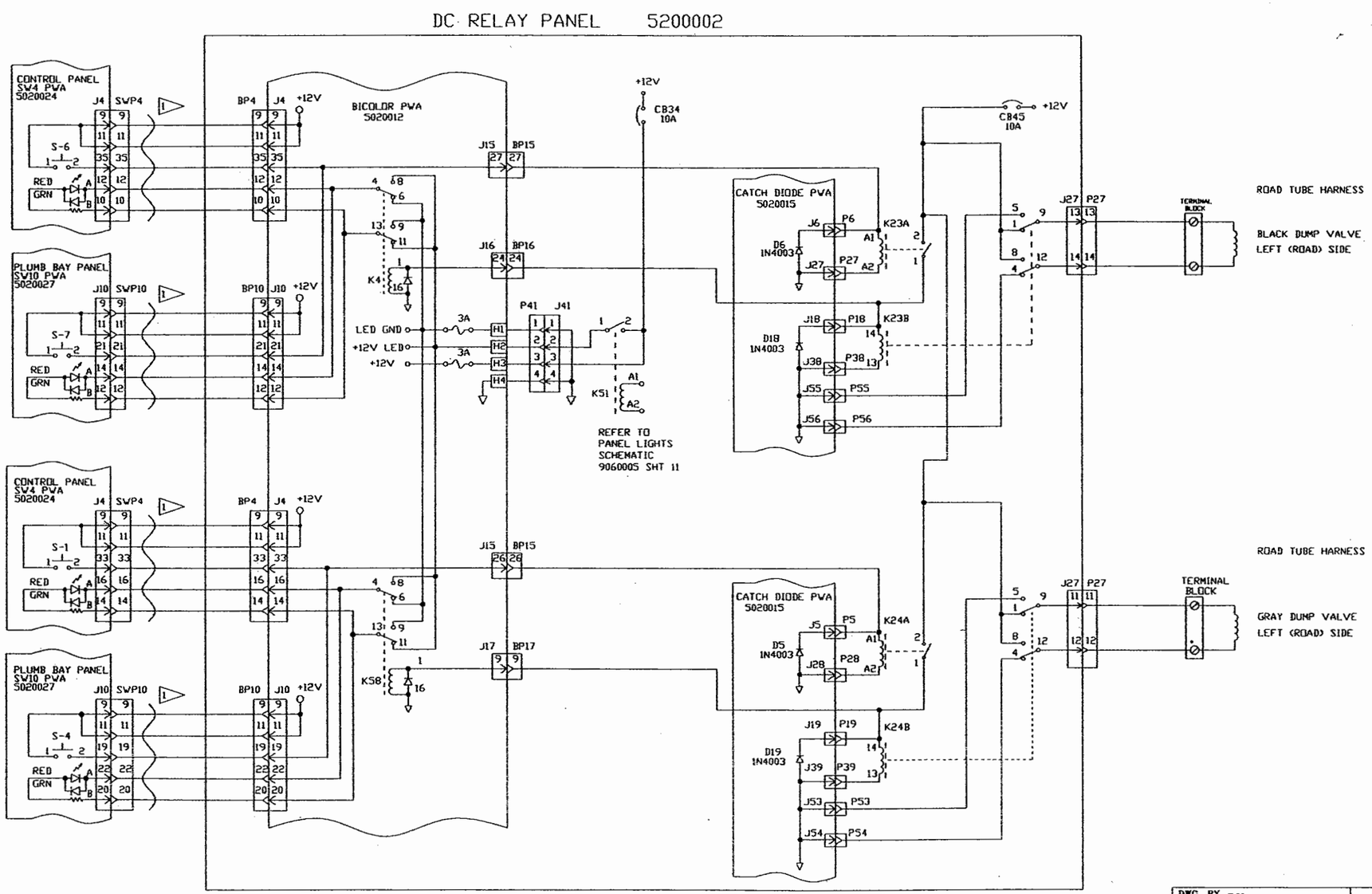

DWG. BY RK	FEATHERLITE 1601 DOLGNER PL SANFORD FLA 32771 TEL 1-407-323-1120 FAX 1-407-323-1945
CHK. BY HAK	
ENGR. BY RK	
CHASIS: H3,XL2	TITLE: SCHEMATIC,BLACK-AND-GRAY-DUMP VALVES,LEFT-(ROAD)-SIDE
DATE : 04/18/99	
PROPRIETARY NOTICE: THIS DOCUMENT AND THE INFORMATION DISCLOSED ARE CONFIDENTIAL AND PROPRIETARY TO FEATHERLITE. DISCLOSURE OF SUCH INFORMATION IS EXPRESSLY FORBIDDEN WITHOUT OUR PRIOR WRITTEN PERMISSION	SCALE: NONE; DRAWING NO.: 9060005; DRAWING FILE # 906005-24B.DWG; SHEET: 24 OF —; REV B

DC RELAY PANEL

REVISIONS			
REV	DESCRIPTION	DATE	APPROVED
–	ORIGINAL RELEASE	4/18/99	HAK
A	NOT USED WITH MOLDED TANKS	3/15/00	HAK
B	CORRECTED SWITCH NOMENCLATURE	8/1/03	MJF

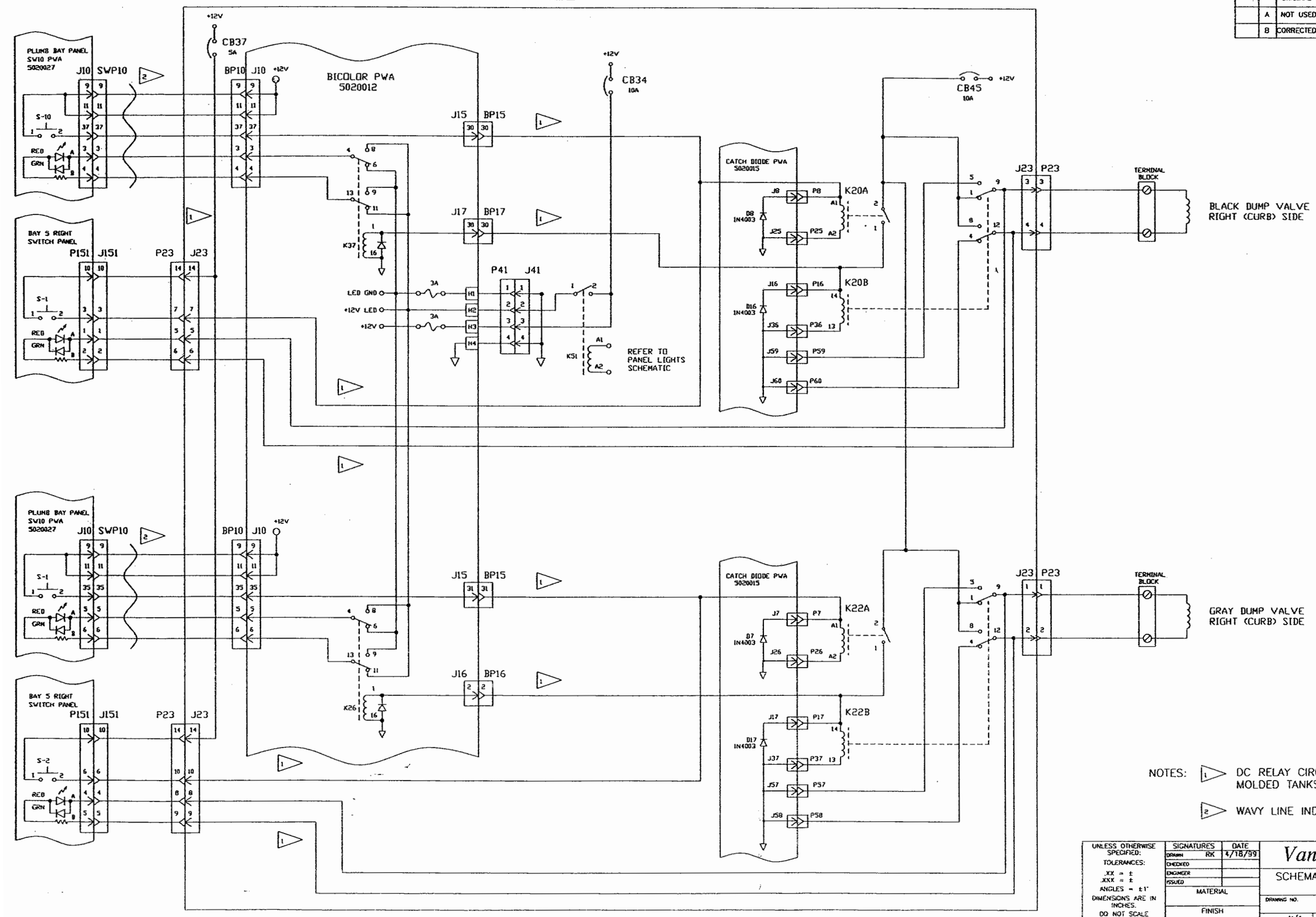

NOTES:

1. DC RELAY CIRCUITRY NOT USED WITH MOLDED TANKS (NO VALVES)
2. WAVY LINE INDICATES RIBBON CABLE

UNLESS OTHERWISE SPECIFIED: TOLERANCES: .XX = ± .XXX = ± ANGLES = ±1° DIMENSIONS ARE IN INCHES. DO NOT SCALE DRAWING.	SIGNATURES	DATE
	DRAWN RK	4/18/99
	CHECKED	
	ENGINEER	
	ISSUED	
	MATERIAL	
	FINISH	

Vantare by Featherlite

SCHEMATIC, BLACK AND GRAY DUMP, RIGHT (CURB) SIDE

DRAWING NO. 9060005 REV. B

SCALE N/A FILE NO. 9060005-25B.DWG SHEET 25

S000906

DC RELAY PANEL

REVISIONS				
	REV	DESCRIPTION	DATE	APPROVED
	–	ORIGINAL RELEASE	4/16/99	HAK
	A	REDRAW	3/15/00	HAK
	B	CORRECTED SWITCH NOMENCLATURE	8/1/03	MJF

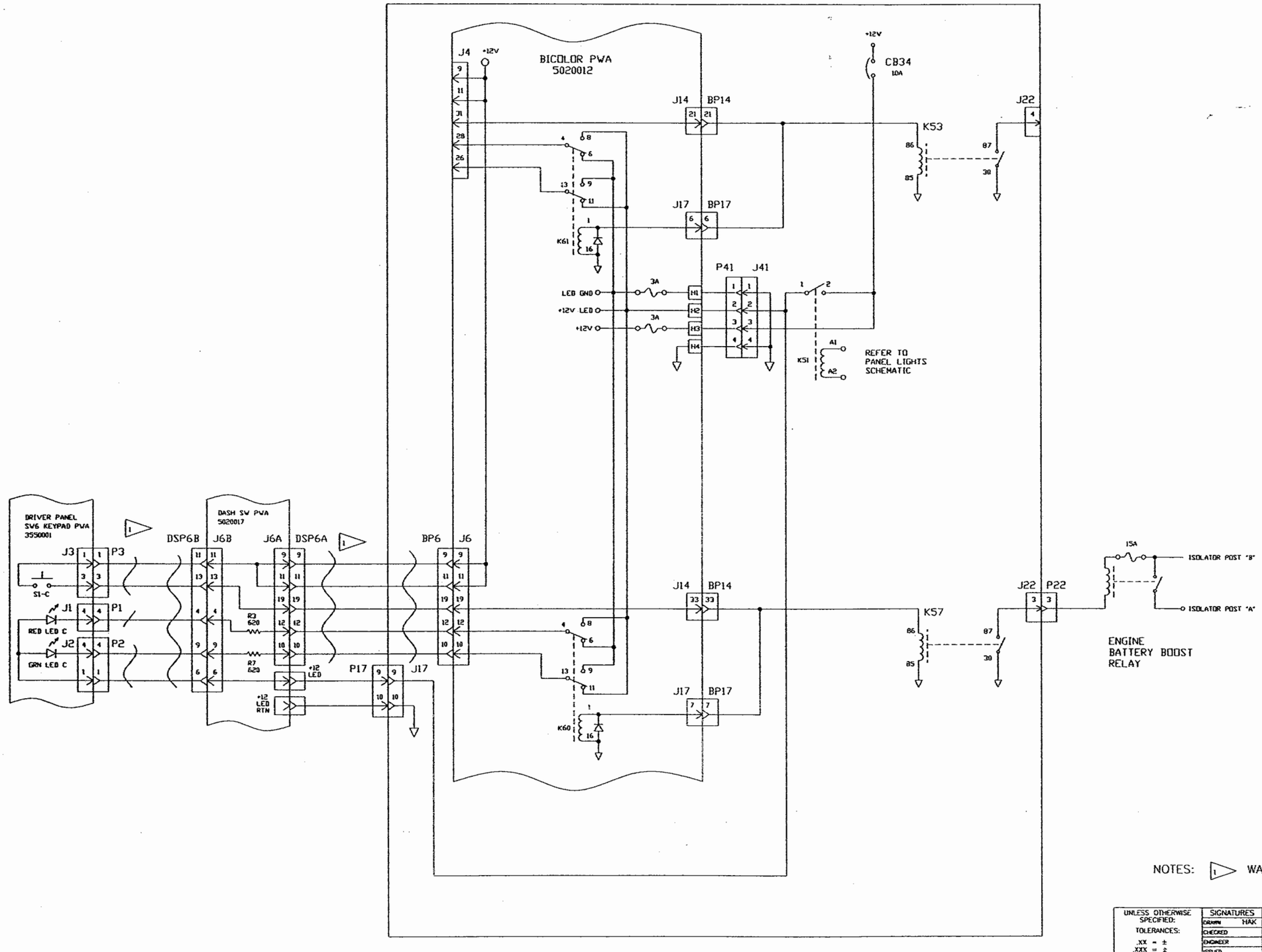

NOTES: WAVY LINE INDICATES RIBBON CABLE

UNLESS OTHERWISE SPECIFIED: TOLERANCES: .XX = ± .XXX = ± ANGLES = ±1° DIMENSIONS ARE IN INCHES. DO NOT SCALE DRAWING.	SIGNATURES	DATE
	DRAWN HAK	4/16/99
	CHECKED	
	ENGINEER	
	ISSUED	
	MATERIAL	
	FINISH	

Vantare by Featherlite

ENGINE BATTERY BOOST

DRAWING NO. 9060005 REV. B

SCALE N/A FILE NO. 9060005-26B.DWG SHEET 26

NOTE — INTERPRET ALL DRAWINGS IN ACCORDANCE WITH ANSI Y14.5-1982

1 ▷ WAVY LINE INDICATES RIBBON CABLE.

2 ▷ K21D SHOWN IN RESET CONDITION.

3 RELAYS SHOWN IN THE RELAXED POSITION.

REVISIONS			
REV.	DESCRIPTION	DATE	APPROVAL
A	REDRAWN,PRIV-SHADE-FEEDBACK -	3/30/00	HAK
B	CORRECTED-J21,PIN-OUT,REFORMATTED SWAPPED,PINOUT,P41,BICOLOR,BD. CORRECTED SWITCH NOMENCLATURE	8/1/03	MJF

DC RELAY PANEL 5200002

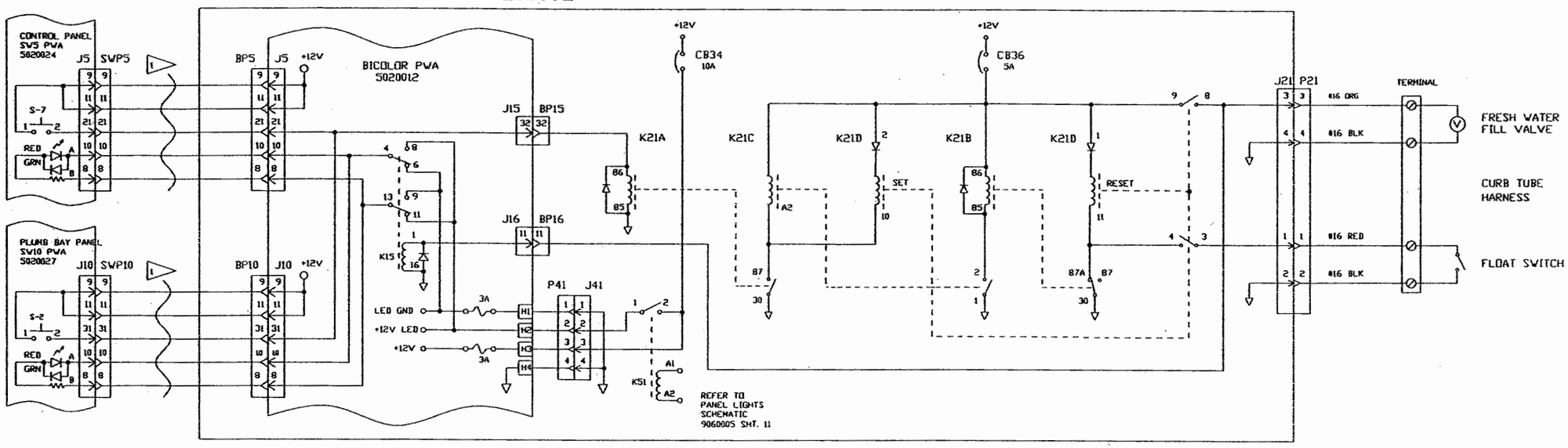

DC RELAY PANEL 5200002

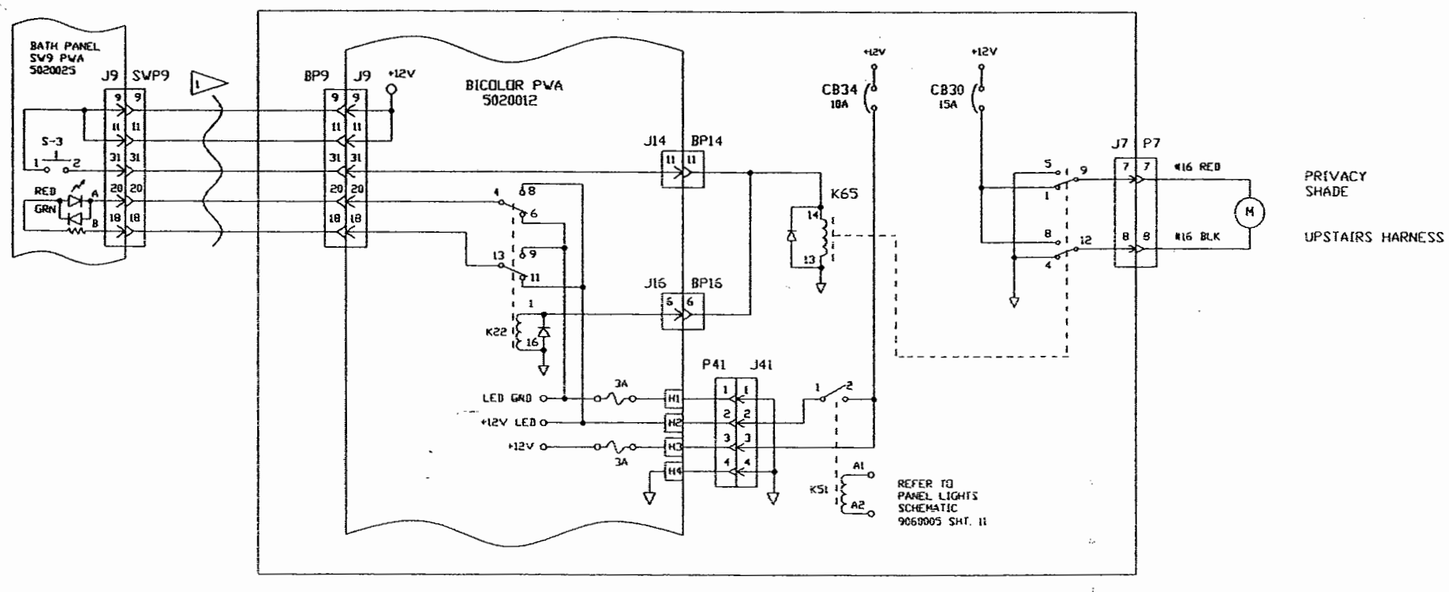

DWG. BY RK	FEATHERLITE 1601 DOLGNER PL SANFORD FLA 32771 TEL. 1-407-323-1120 FAX 1-407-323-1945
CHK. BY HAK	
ENGR. BY RK	
CHASSIS: H3-FROM-#3227-ON XL-FROM-#7202-ON	TITLE: SCHEMATIC,FRESH-WATER-FILL, PRIVACY-SHADE
DATE : 4/16/99	
PROPRIETARY NOTICE: THIS DOCUMENT AND THE INFORMATION DISCLOSED ARE CONFIDENTIAL AND PROPRIETARY TO FEATHERLITE. DISCLOSURE OF SUCH INFORMATION IS EXPRESSLY FORBIDDEN WITHOUT OUR PRIOR WRITTEN PERMISSION	SCALE: NONE; DRAWING NO.: 9060005; REV B; DRAWING FILE #: 9060005-27B.DWG; SHEET: 27 OF --

REVISIONS			
REV	DESCRIPTION	DATE	APPROVED
–	ORIGINAL RELEASE	4/16/99	HAK
A	REDRAWN	3/20/00	HAK
B	CHANGE RELAY FROM POTTER TO A FINDER RELAY.	2/18/03	LMG
C	CORRECTED SWITCH NOMENCLATURE	8/1/03	MJF

DC RELAY PANEL

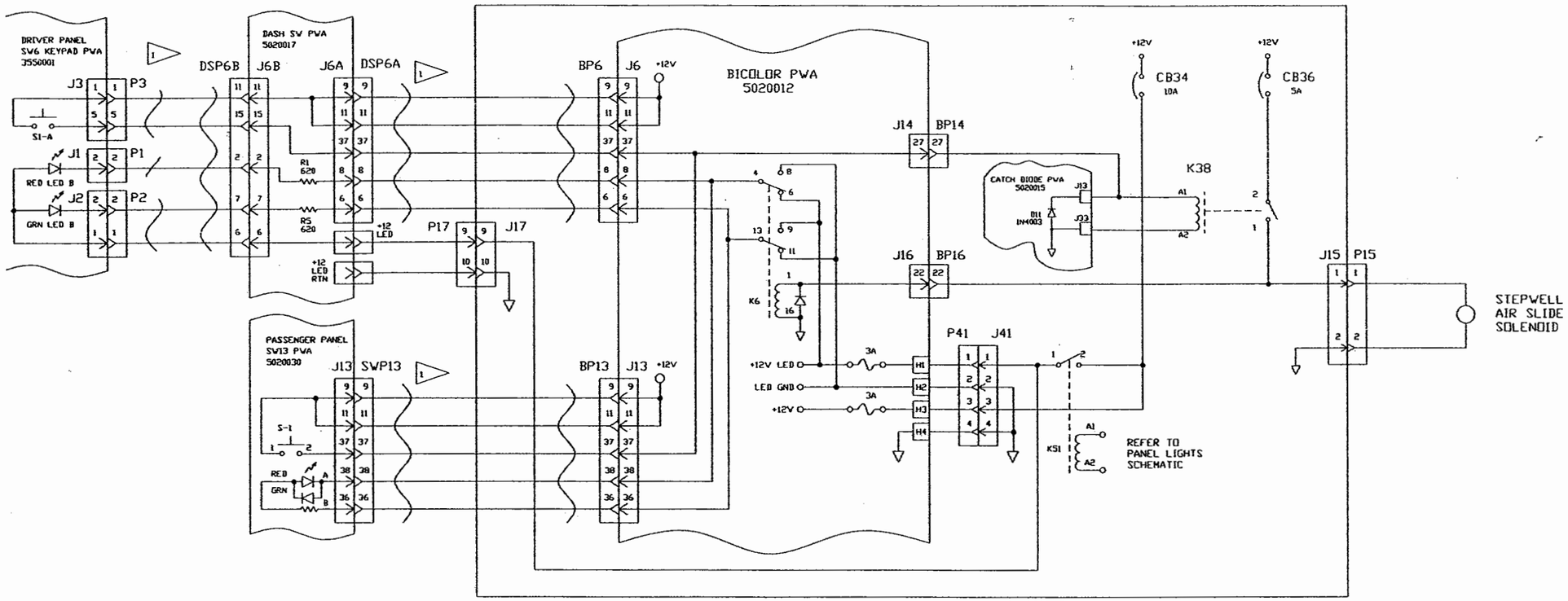

DC RELAY PANEL

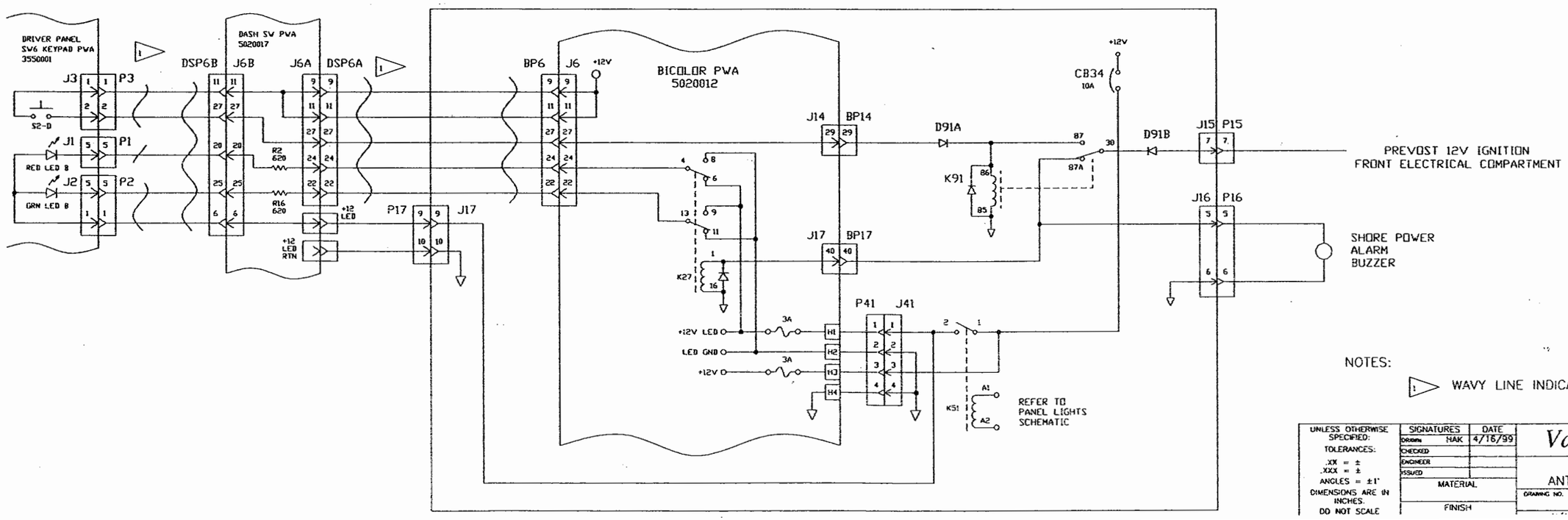

NOTES:

1. WAVY LINE INDICATES RIBBON CABLE

UNLESS OTHERWISE SPECIFIED:	SIGNATURES		DATE	Vantare by Featherlite
TOLERANCES:	DRAWN	HAK	4/16/99	SCHEMATIC, AIR SLIDE, ANTENNA/SHORE POWER ALARM
.XX = ±	CHECKED			
.XXX = ±	ENGINEER			
ANGLES = ±1°	ISSUED			
DIMENSIONS ARE IN INCHES. DO NOT SCALE	MATERIAL			DRAWING NO. 9060005 REV. C
	FINISH			

REVISIONS			
REV	DESCRIPTION	DATE	APPROVED
-		3/30/99	
A	SPLIT SINGLE AND DUAL TANK SCHEMATICS	8/13/99	

SINGLE GAUGE CIRCUIT

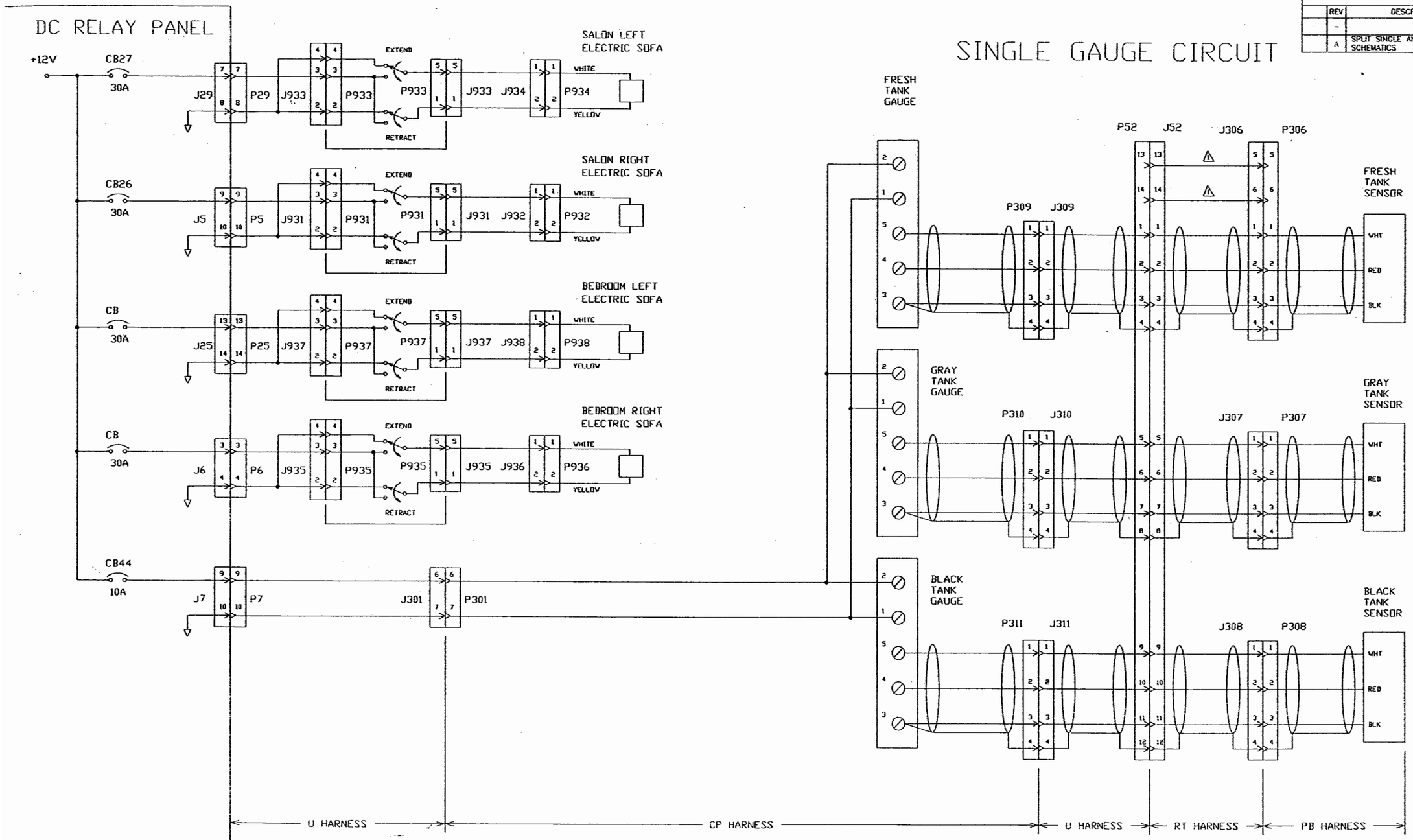

NOTES: ⚠ THESE WIRES ARE PART OF THE STANDARD HARNESS AND ARE NOT USED FOR SINGLE GAUGES

UNLESS OTHERWISE SPECIFIED: TOLERANCES: .XX = ± TOL1 .XXX = ± TOL2 ANGLES° = ±1° DIMENSIONS ARE IN INCHES. DO NOT SCALE DRAWING.	SIGNATURES	DATE
	DRAWN	HUGING
	CHECKED	
	ENGINEER	HUGING
	ISSUED	3/30/99
	MATERIAL	
	FINISH	

Vantare by Featherlite

SCHEMATIC, ELEC SOFAS, SINGLE TANK GAUGES

DRAWING NO. 9060005 REV. A

SCALE NONE FILE NO. 9060005-29A.DWG SHEET 29

9060005 REV A

REVISIONS			
REV.	DESCRIPTION	DATE	APPROVAL
A	ADDED,ANTENNA,CONTROLLER	3/22/00	HAK
B	ADDED,CB21,CB23,CB24	9/17/01	TED

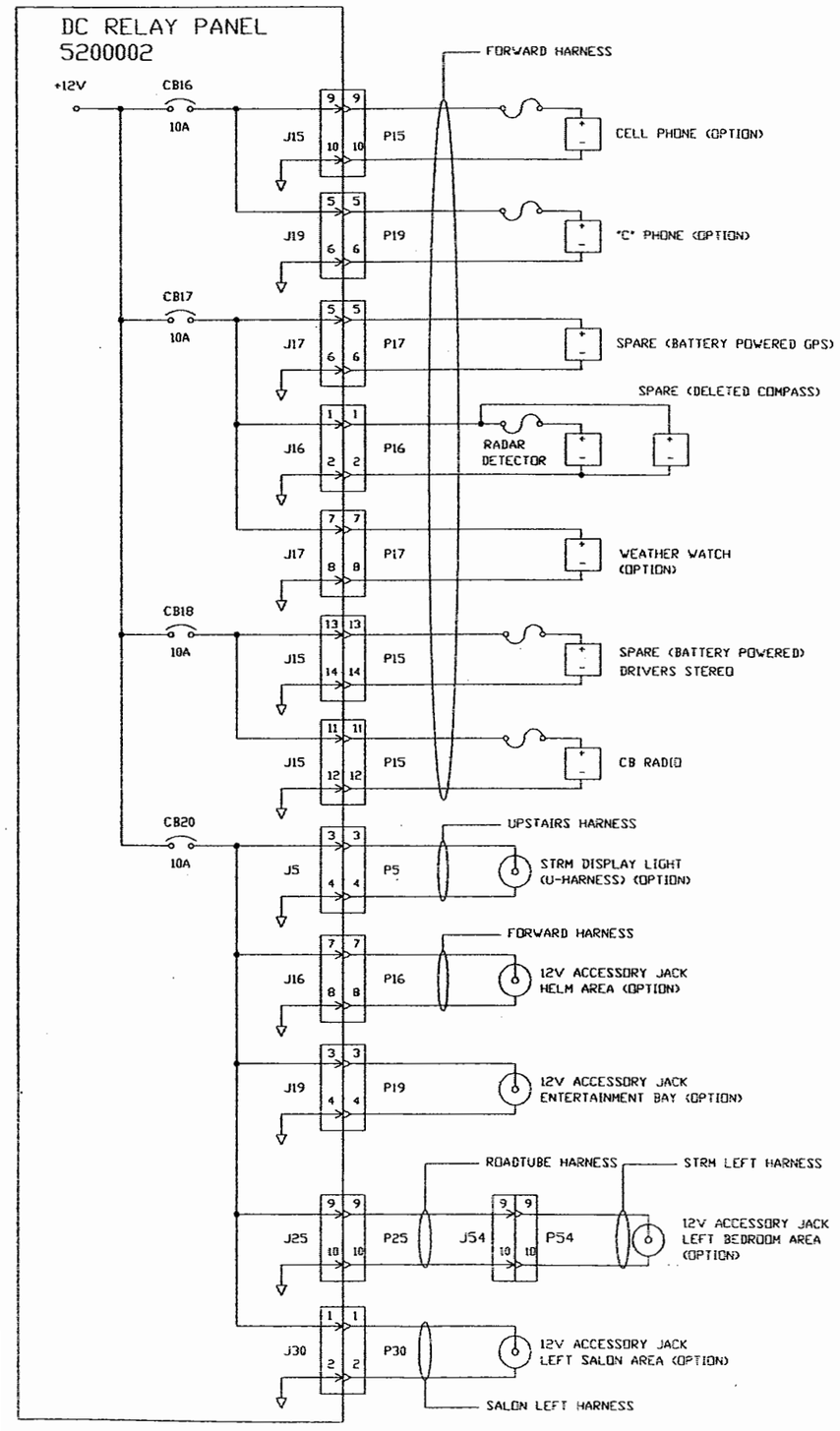

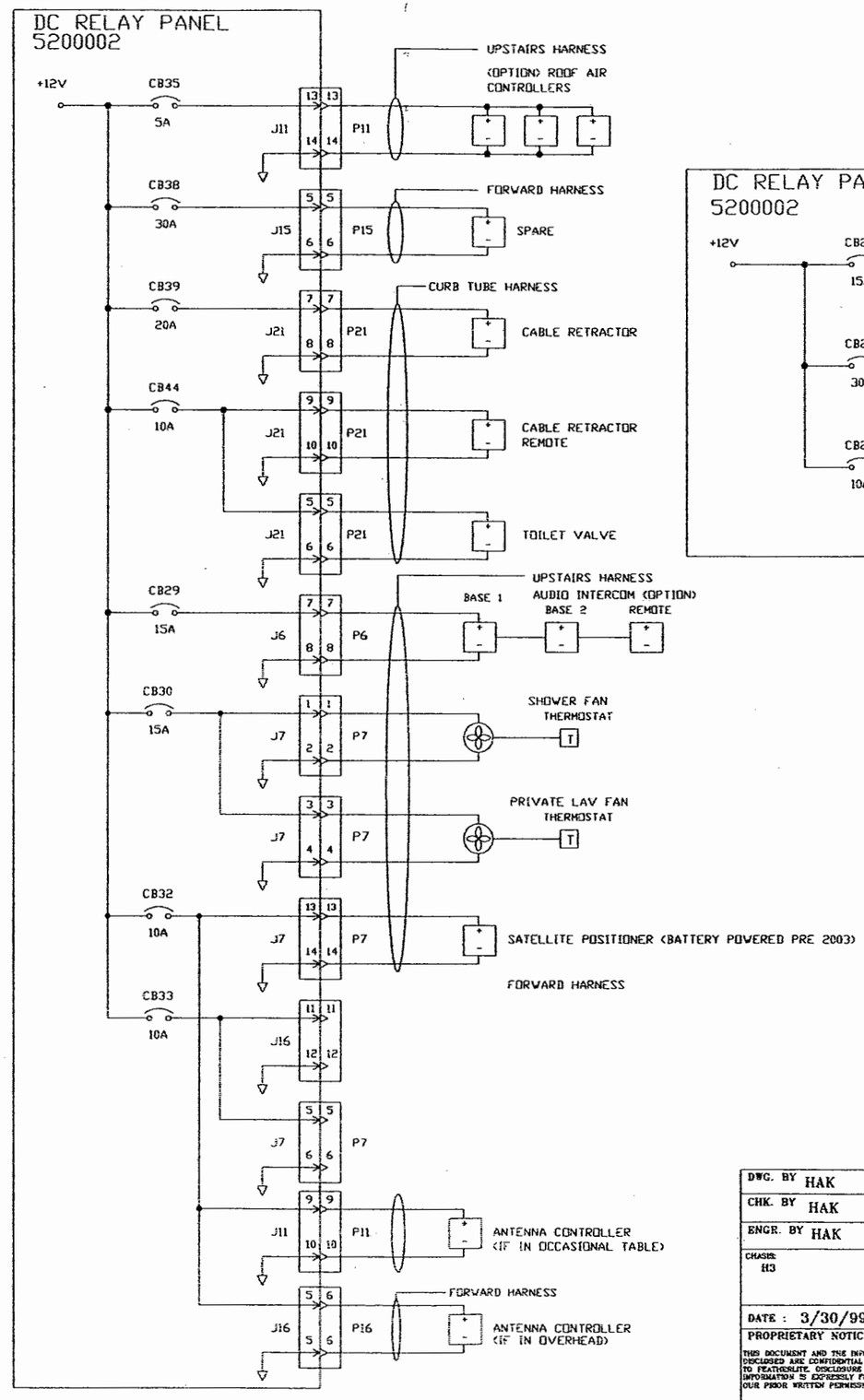

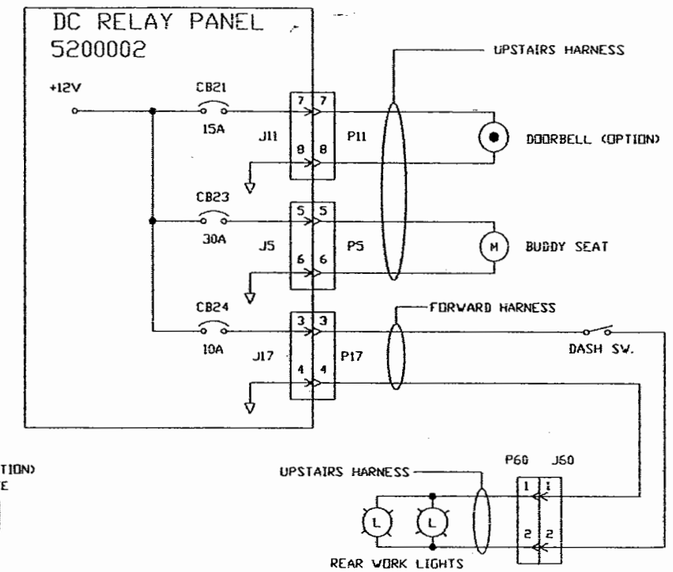

DWG. BY HAK	FEATHERLITE
CHK. BY HAK	1601 DOLGNER PL
ENGR. BY HAK	SANFORD FLA 32771
CHASIS: H3	TEL. 1-407-323-1120 FAX 1-407-323-1945
DATE : 3/30/99	TITLE: SCHEMATIC,BREAKER-FED, DC-RELAY,CIRCUITS
PROPRIETARY NOTICE: THIS DOCUMENT AND THE INFORMATION DISCLOSED ARE CONFIDENTIAL AND PROPRIETARY TO FEATHERLITE. DISCLOSURE OF SUCH INFORMATION IS EXPRESSLY FORBIDDEN WITHOUT OUR PRIOR WRITTEN PERMISSION	SCALE: NONE · DRAWING NO.: 9060005 · REV B · DRAWING FILE # 9060005-30B.DWG · SHEET: 30 OF –

NOTE —
1 WAVY LINE INDICATES RIBBON CABLE

REVISIONS			
REV.	DESCRIPTION	DATE	APPROVAL
A	ADD-LOADS,HARNESS-INFO	8/13/01	TED

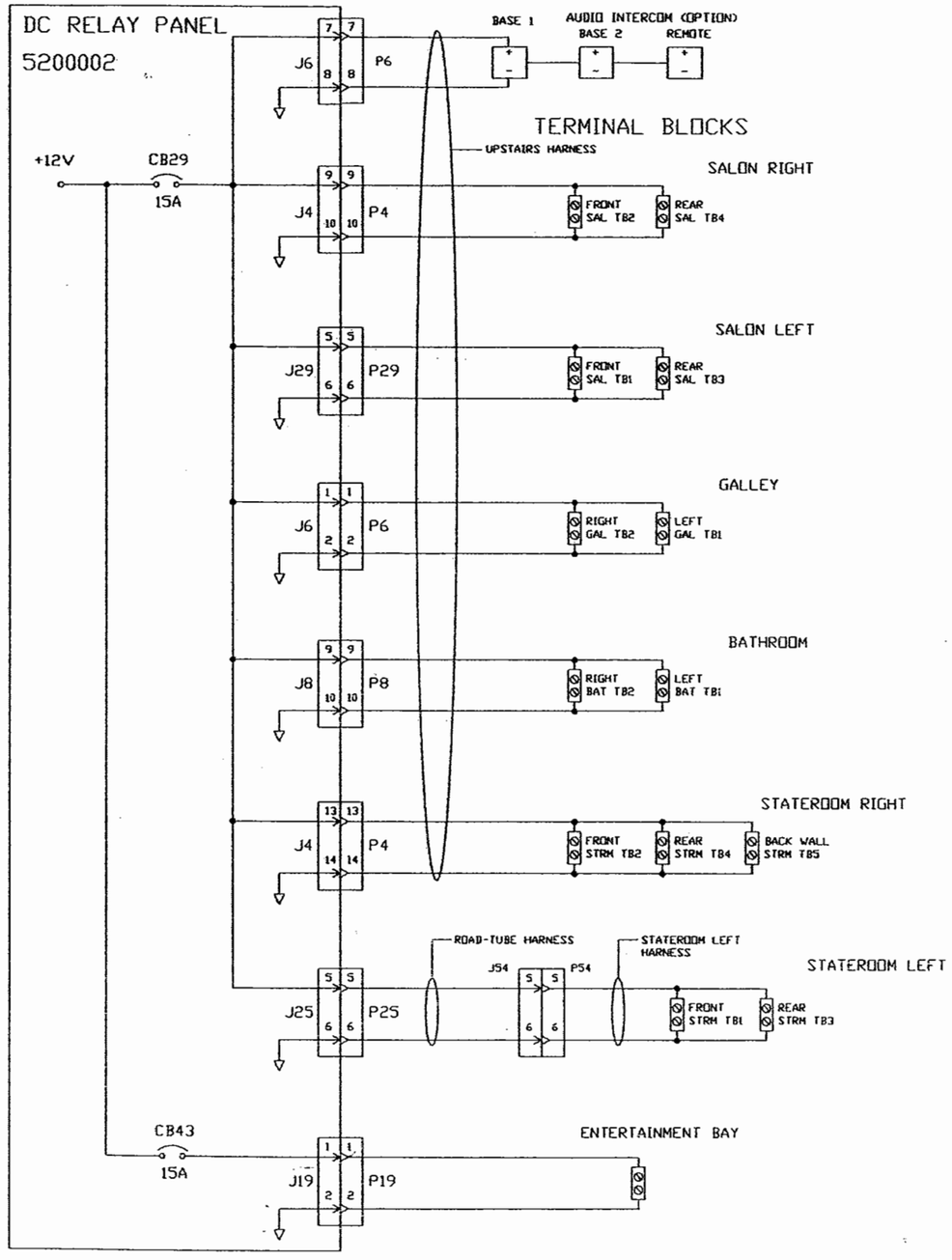

TYPICAL LOADS:
UPPER CABINET LIGHTS
LOWER CABINET LIGHTS
READING LIGHTS
TABLE LAMPS
PORTABLE TELEVISION

TYPICAL LOADS:
UPPER CABINET LIGHTS
LOWER CABINET LIGHTS
READING LIGHTS
TABLE LAMPS
PORTABLE TELEVISION

TYPICAL LOADS:
UPPER CABINET LIGHTS
LOWER CABINET LIGHTS
READING LIGHTS
PORTABLE TELEVISION

TYPICAL LOADS:
UPPER CABINET LIGHTS
LOWER CABINET LIGHTS
CLOSET LIGHTS

TYPICAL LOADS:
UPPER CABINET LIGHTS
CLOSET LIGHTS
READING LIGHTS

TYPICAL LOADS:
UPPER CABINET LIGHTS
CLOSET LIGHTS
READING LIGHTS

TYPICAL LOADS:
BAY STEREO
ANTENNA AMPLIFIER
BAY FANS
AC PANEL S/S RELAYS

DWG. BY HAK	FEATHERLITE 1601 DOLGNER PL SANFORD FLA 32771 TEL. 1-407-323-1120 FAX 1-407-323-1945
CHK. BY HAK	
ENGR. BY HAK	
CHASIS: H3,XL2	TITLE: SCHEMATIC,TERMINAL-BLOCK DC-CIRCUITS
DATE : 3/30/99	
PROPRIETARY NOTICE: THIS DOCUMENT AND THE INFORMATION DISCLOSED ARE CONFIDENTIAL AND PROPRIETARY TO FEATHERLITE. DISCLOSURE OF SUCH INFORMATION IS EXPRESSLY FORBIDDEN WITHOUT DUE PRIOR WRITTEN PERMISSION	SCALE: NONE DRAWING NO.: 9060005 DRAWING FILE # 9060005-31A.DWG SHEET: 31 OF — REV A

REVISIONS				
ZONE	REV	DESCRIPTION	DATE	APPROVED
	A	CHNGD THERMOSTAT CB35 (5 AMP) TO CB44 (10 AMP)	4/13/00	
	B	MODIFIED AQUA HOT ENCLOSURE INFO (DRAWING REFERENCES).	07/21/00	T. DIXON
	C	CORRECTED SWITCH NOMENCLATURE 2003 AQUA HOT CONTROLLER 4637, 4620 & SUBSEQUENT	8/1/03	MJF

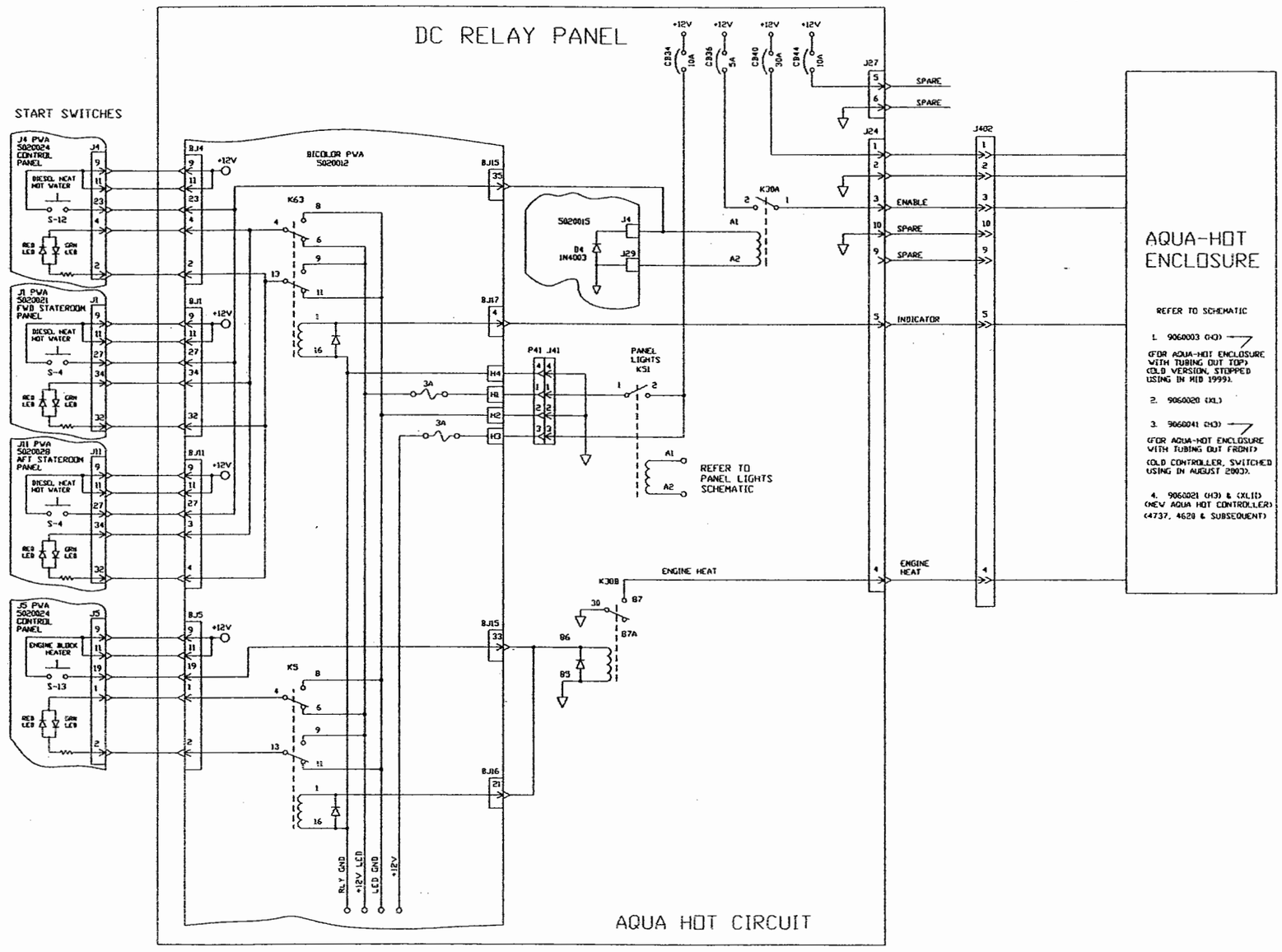

NEXT ASSY:	UNLESS OTHERWISE SPECIFIED: TOLERANCES: .XX = ± .XXX = ± ANGLES = ±1° DIMENSIONS ARE IN INCHES. DO NOT SCALE DRAWING.	SIGNATURES / DATE: DRAWN RK 3/16/99; CHECKED; ENGINEER; ISSUED	*Vantare by Featherlite*
WIRE LIST:		MATERIAL	SCHEMATIC, AQUA-HOT, DC RELAY PANEL
PARTS LIST:		FINISH	DRAWING NO. 9060005 REV. C
			SCALE N/A FILE N:9060005-32C.Dwg SHEET 32

9060005 C

DC RELAY PANEL

REVISIONS			
REV	DESCRIPTION	DATE	APPROVED
-		8/13/99	

DUAL GAUGE CIRCUIT

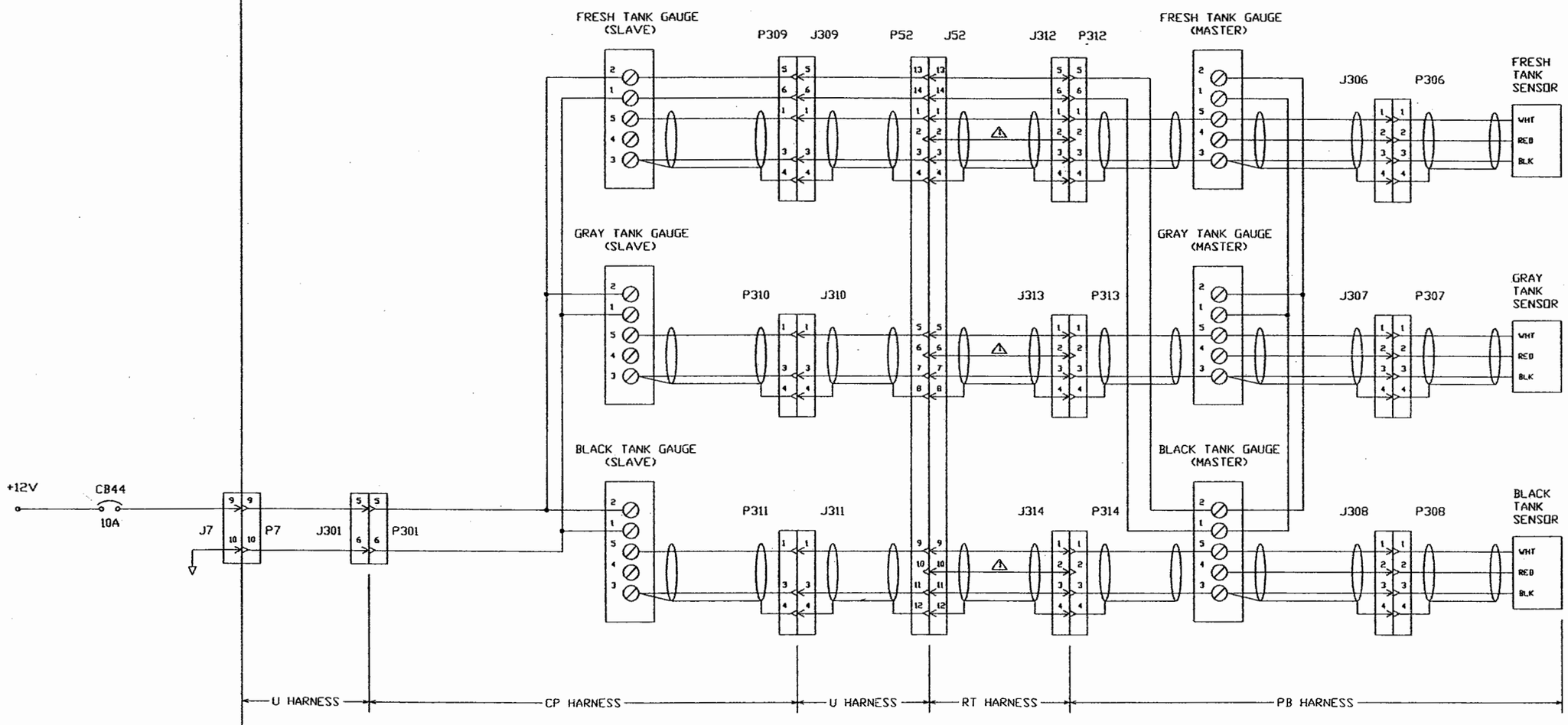

NOTES: ⚠ THESE WIRES ARE PART OF THE STANDARD HARNESS AND ARE NOT USED FOR DUAL GAUGES

UNLESS OTHERWISE SPECIFIED: TOLERANCES: .XX = ± TOL1 .XXX = ± TOL2 ANGLES = ±1° DIMENSIONS ARE IN INCHES. DO NOT SCALE DRAWING.	SIGNATURES	DATE
	DRAWN	M.KING
	CHECKED	
	ENGINEER	M.KING
	ISSUED	8/13/99
	MATERIAL	
	FINISH	

Vantare by Featherlite

SCHEMATIC, DUAL TANK GAUGES

DRAWING NO. 9060005 REV. -

SCALE NONE FILE NO. 9060005-33.DWG SHEET 33

9060005

NOTE — INTERPRET ALL DRAWINGS IN ACCORDANCE WITH ANSI Y14.5-1982
1 WAVY LINE INDICATES RIBBON CABLE
2 MOUNTED IN A UL APPROVED ENCLOSURE.
3 APPLICABLE ONLY TO COACHES WITH RVAC AIR CONDITIONING SYSTEMS

REVISIONS			
REV.	DESCRIPTION	DATE	APPROVAL
A	CORRECTED-SWP5-PINOUT(ZONE-C8) REFORMATTED SWAPPED,PINOUT,P41,BICOLOR,BD.	07/23/01	TED

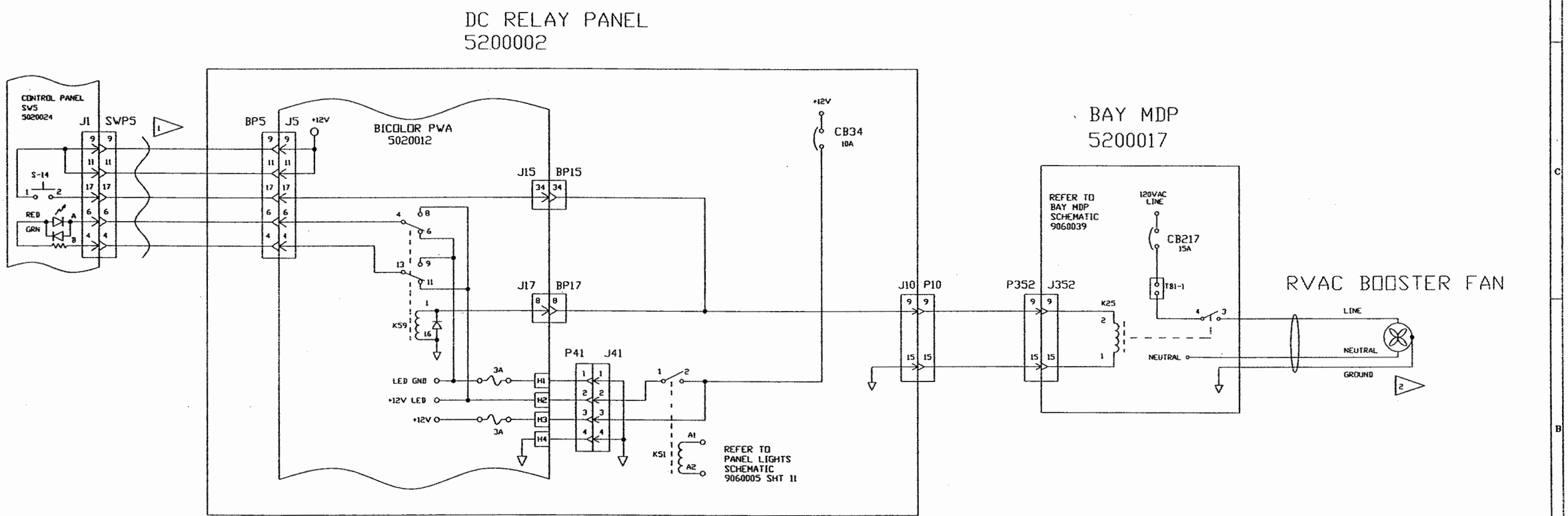

DWG. BY JCD	FEATHERLITE 1601 DOLGNER PL SANFORD FLA 32771 TEL 1-407-323-1120 FAX 1-407-323-1943	
CHK. BY HAK		
ENGR. BY HAK		
CHASIS: H3-FROM-#3227-ON XL-FROM-#7202-ON	TITLE: SCHEMATIC,RVAC-BOOSTER-FAN	
DATE : 05/17/00		
PROPRIETARY NOTICE: THIS DOCUMENT AND THE INFORMATION DISCLOSED ARE CONFIDENTIAL AND PROPRIETARY TO FEATHERLITE. DISCLOSURE OF SUCH INFORMATION IS EXPRESSLY FORBIDDEN WITHOUT OUR PRIOR WRITTEN PERMISSION	SCALE: NONE	DRAWING NO.: 9060005 — REV A
		DRAWING FILE # 9060005-34A.DWG — SHEET: 34OF -

NOTE — INTERPRET ALL DRAWINGS IN ACCORDANCE WITH ANSI Y14.5-1982

REVISIONS			
REV.	DESCRIPTION	DATE	APPROVAL
A			
B			
C			
D			

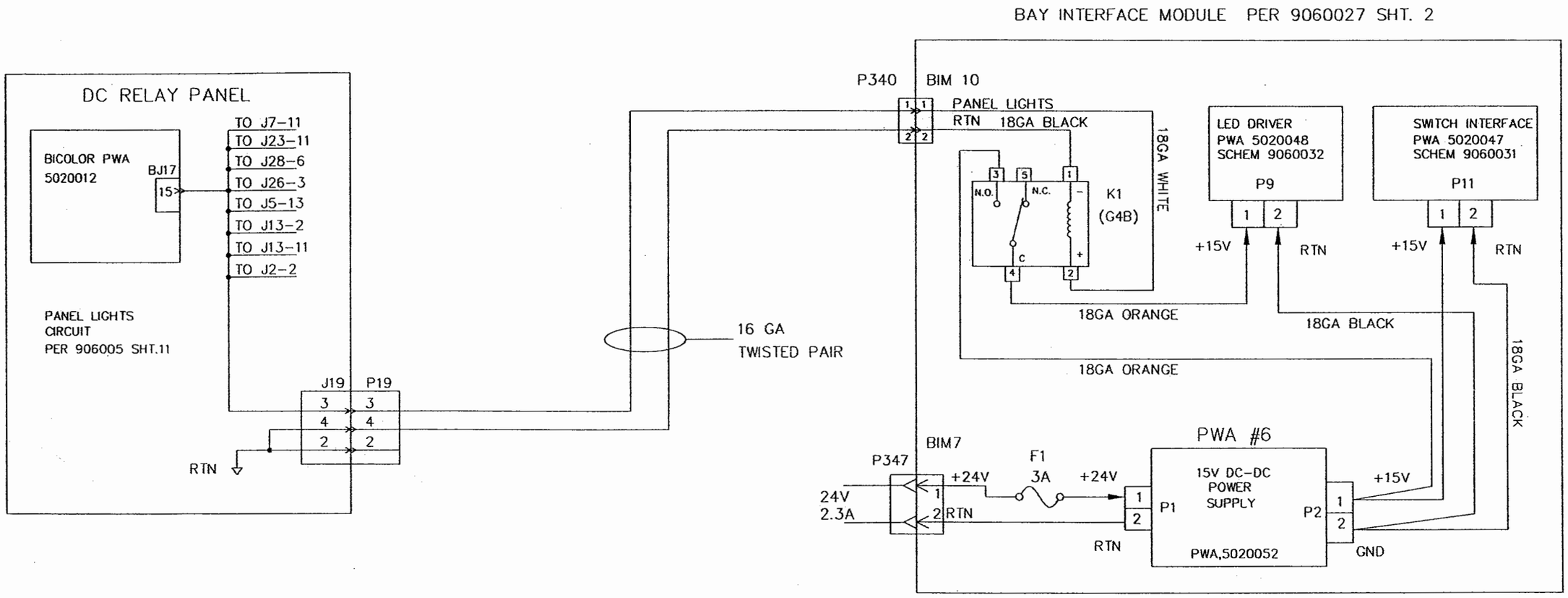

HARDWARE BILL OF MATERIAL

QTY	ITEM	PART NUMBER	DESCRIPTION	MATERIAL STOCK SIZE
	-02			
	-01			

ITEM	MATERIAL FINISH
9060005	

CUSTOMER NAME:

CUSTOMER APPROVAL & DATE:

THIRD ANGLE PROJECTION

DO NOT SCALE DRAWING

TOLERANCES UNLESS OTHERWISE SPECIFIED:
ANGLES: ± 1/4°
FRACTIONS: ±1/64
DECIMALS: XX ±.010
DECIMALS: XXX ±.005

DWG. BY J.DIXON

CHK. BY T.DIXON

ENGR. BY T.DIXON

CHASIS:

DATE : 12/01/00

PROPRIETARY NOTICE:

THIS DOCUMENT AND THE INFORMATION DISCLOSED ARE CONFIDENTIAL AND PROPRIETARY TO FEATHERLITE. DISCLOSURE OF SUCH INFORMATION IS EXPRESSLY FORBIDDEN WITHOUT OUR PRIOR WRITTEN PERMISSION

FEATHERLITE
1601 DOLGNER PL
SANFORD FLA 32771
TEL 1-407-323-1120 FAX 1-407-323-1945

TITLE:
SCHEMATIC,PANEL LIGHTS
AC SWITCH PANEL

SCALE: NONE

DRAWING NO.: 9060005

DRAWING FILE # 9060005-35.dwg

SHEET: 35 OF 35

REV ---

REVISIONS			
REV	DESCRIPTION	DATE	APPROVED
A	Change the output wire pins.	2/3/03	LMG
B	CORRECTED SWITCH NOMENCLATURE	8/1/03	MJF

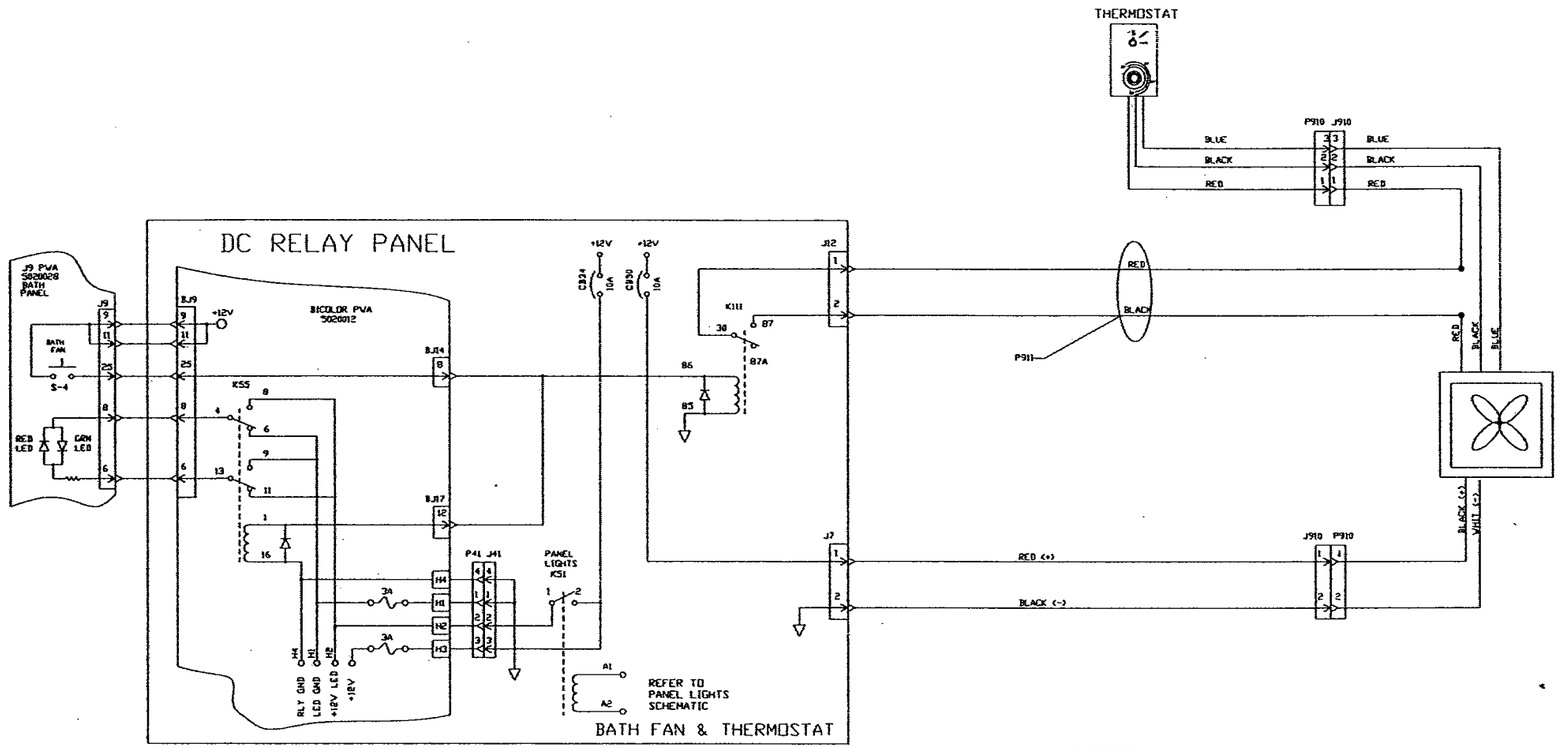

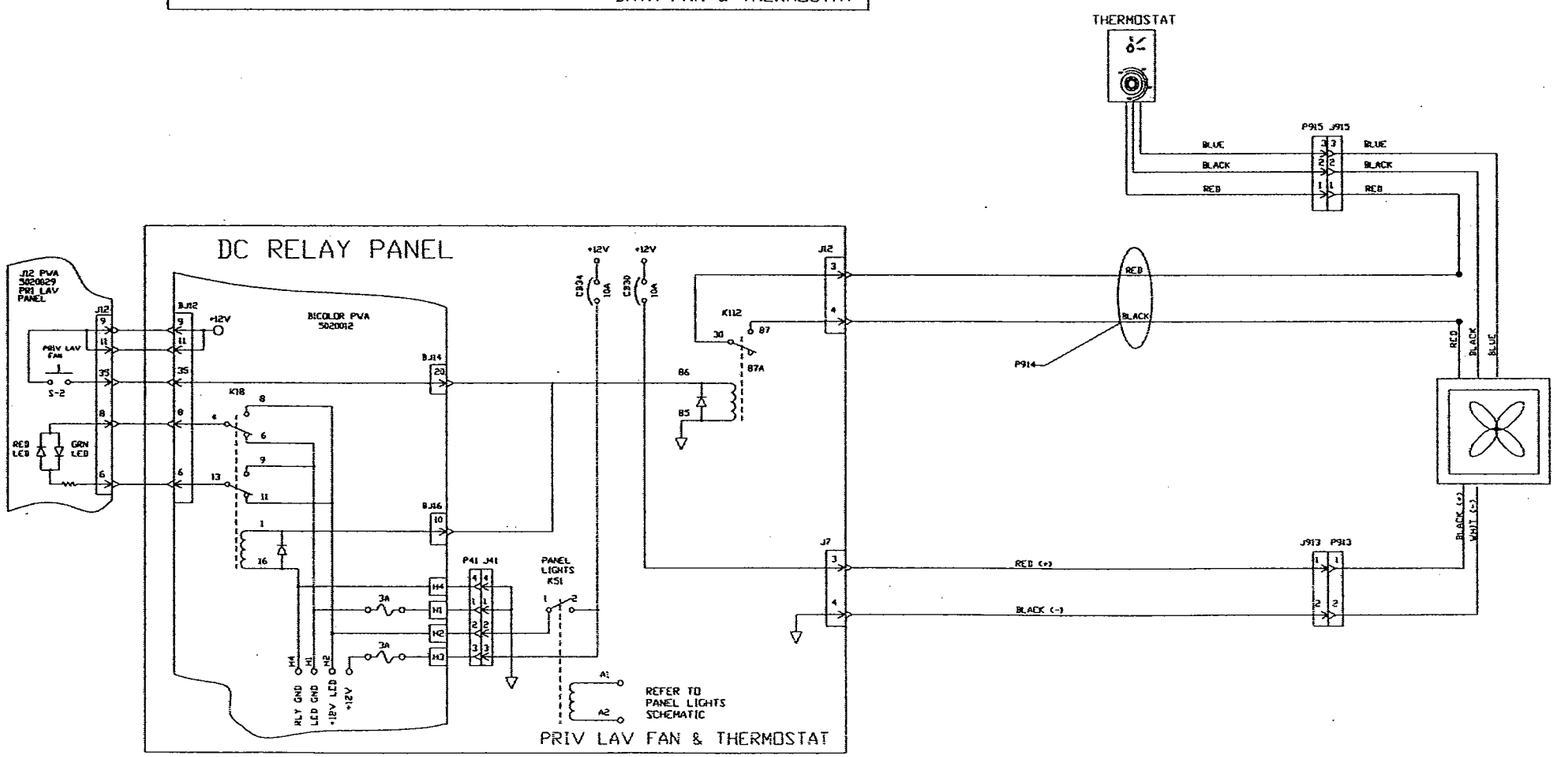

UNLESS OTHERWISE SPECIFIED:	SIGNATURES	DATE	Vantare by Featherlite
TOLERANCES:	DRAWN LMG	5/22/02	SCHEMATIC, BATH & PRIVATE LAV FAN THERMOSTATS.
.XX = ± TOL1	CHECKED		
.XXX = ± TOL2	ENGINEER		
ANGLES = ±1°	ISSUED		
DIMENSIONS ARE IN INCHES.	MATERIAL		DRAWING NO. 9060005 — REV. B
DO NOT SCALE DRAWING.	FINISH		SCALE NONE — FILE NO. 9060005-36B.DWG — SHEET 36

9060005 B

REVISIONS				
ZONE	REV	DESCRIPTION	DATE	APPROVED
	A	CORRECTED SWITCH NOMENCLATURE	8/1/03	MJF

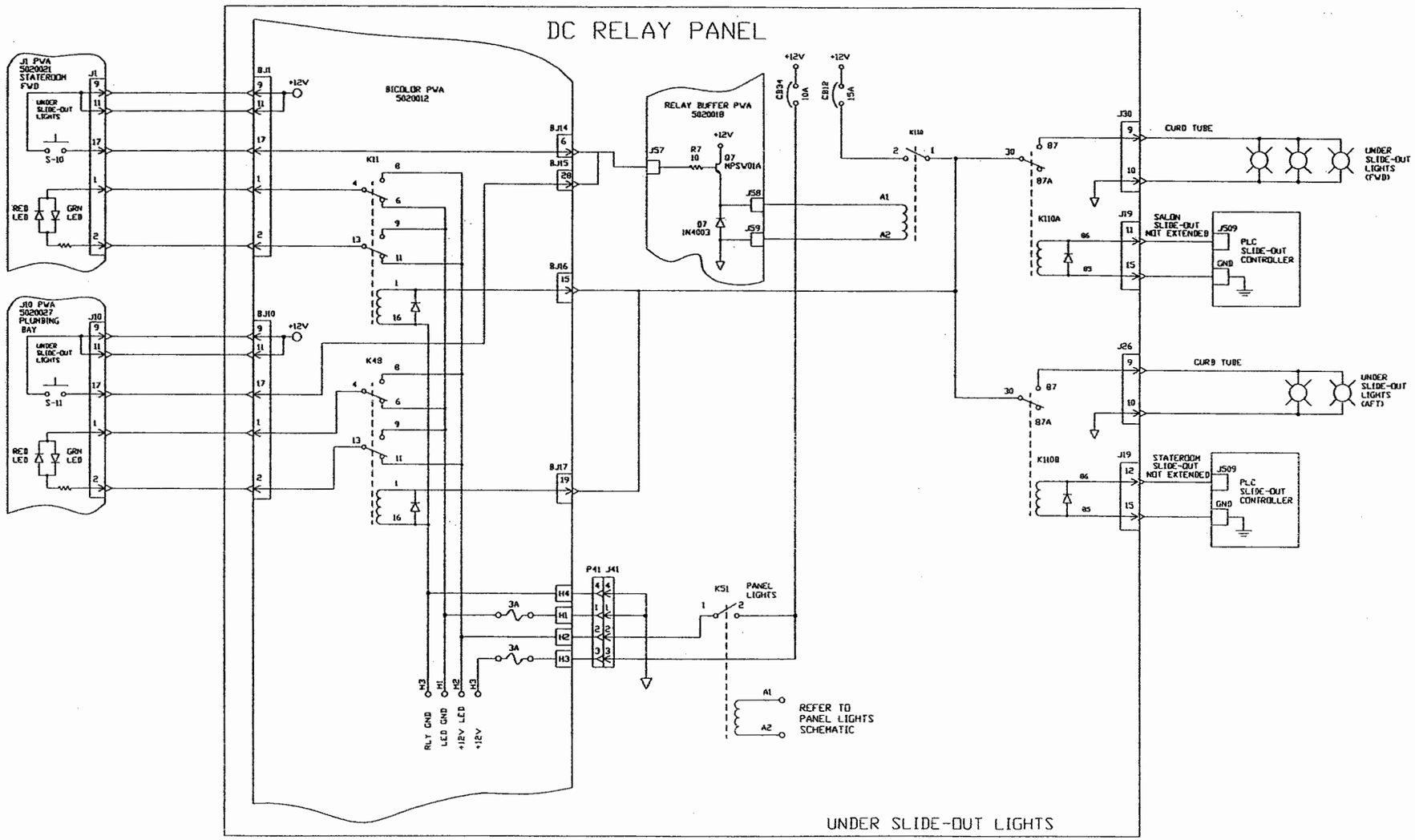

NEXT ASSY:	UNLESS OTHERWISE SPECIFIED: TOLERANCES: .XX = ± .XXX = ± ANGLES = ±1° DIMENSIONS ARE IN INCHES. DO NOT SCALE DRAWING.	SIGNATURES / DATE: DRAWN LMG 2/3/03; CHECKED; ENGINEER; ISSUED; MATERIAL; FINISH	*Vantare by Featherlite*
WIRE LIST:			SCHEMATIC, UNDER SLIDE-OUT LIGHTS
PARTS LIST:			DRAWING NO. 9060005 REV. A
			SCALE N/A FILE MS9060005-37A.DWG SHEET 37

5000606

REVISIONS			
REV	DESCRIPTION	DATE	APPROVED
A	CORRECTED J351	8/12/03	HJF

NOTES:

1. GENERIC DRAWING, PINS ASSIGNED ONLY ON APPLICABLE COACHES

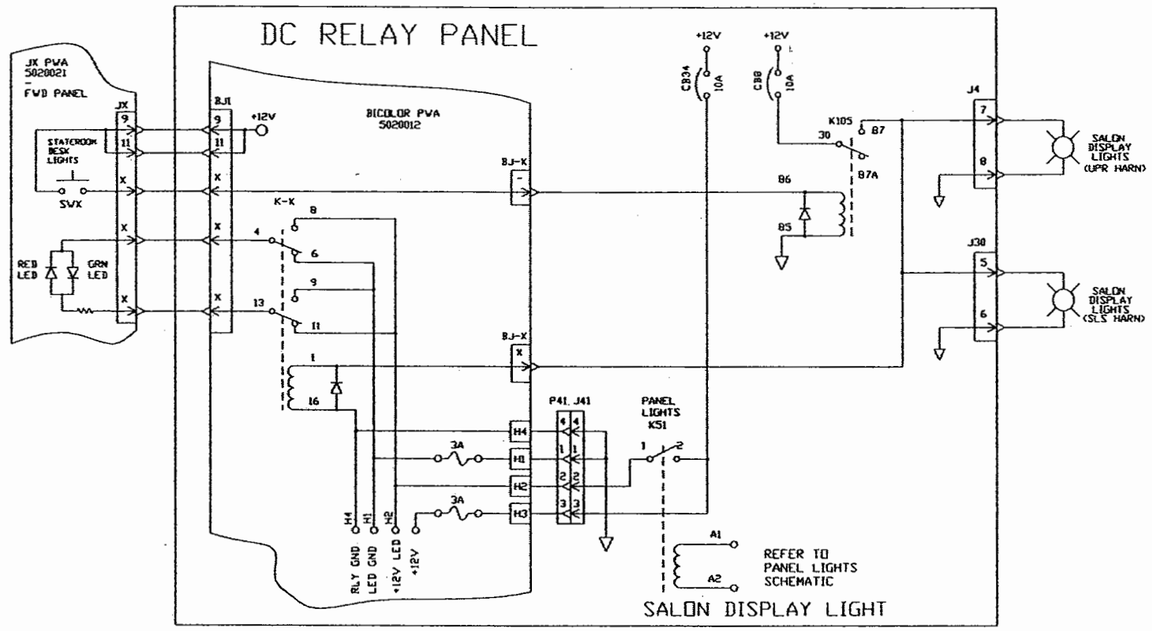

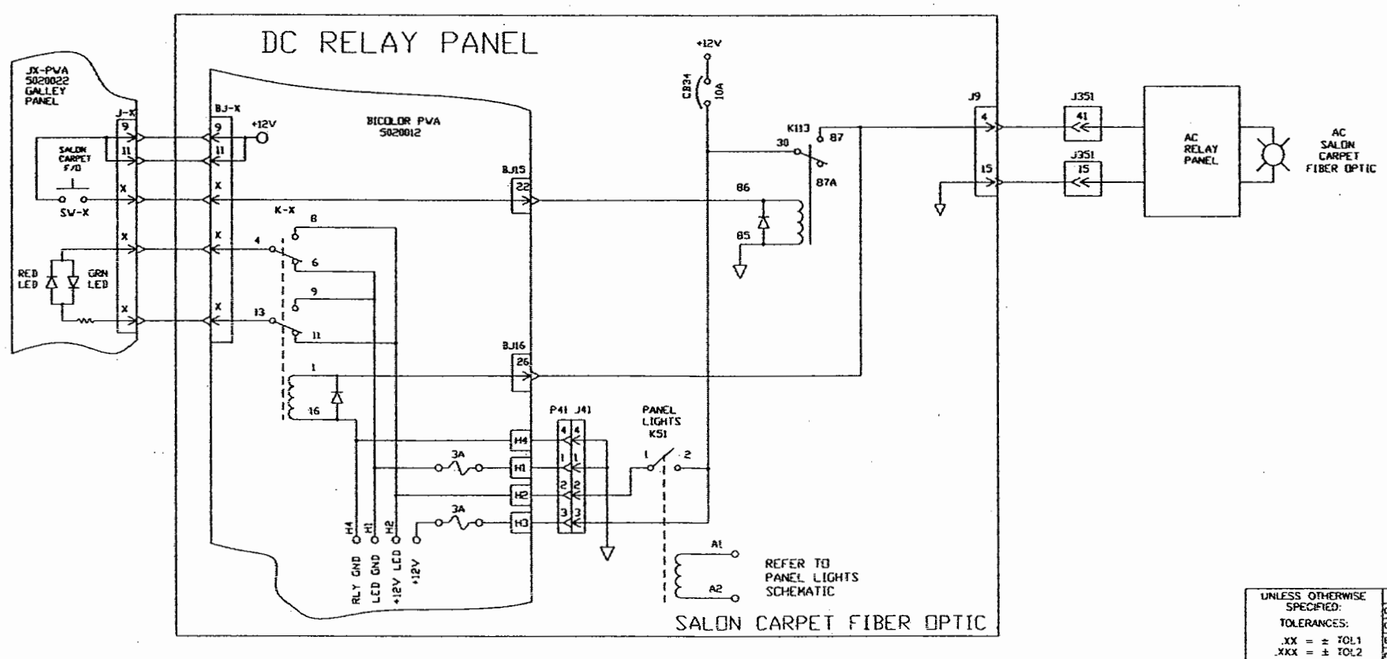

UNLESS OTHERWISE SPECIFIED:	SIGNATURES	DATE	Vantare by Featherlite
TOLERANCES:	DRAWN LMG	2/4/03	SCHEMATIC, SALON DISPLAY LIGHTS, SALON CARPET FIBER OPTIC, H3
.XX = ± TOL1	CHECKED		
.XXX = ± TOL2	ENGINEER		
ANGLES = ±1°	ISSUED		
DIMENSIONS ARE IN INCHES. DO NOT SCALE	MATERIAL		DRAWING NO. 9060005 REV. A
	FINISH		

June 15, 1998
2:58 pm

Bicolor Board Schematic
by Switch

Switch		Switch In	Trigger Out	Bicolor In	Relay	LED Pins
J01	S1	BJ01-35	BJ15-15	BJ16-8	K20	BJ01-26,24
J01	S2	BJ01-33	BJ15-16	BJ17-36	K31	BJ01-22,20
J01	S3	BJ01-37	BJ15-13	BJ17-25	K42	BJ01-18,16
J01	S4	BJ01-27	BJ15-35	BJ17-4	K63	BJ01-34,32
J01	S5	BJ01-31	BJ15-17	BJ16-17	K09	BJ01-30,28
J01	S6	BJ01-23	BJ14-3	BJ17-24	K43	BJ01-10,8
J01	S7	BJ01-21	BJ14-4	BJ17-13	K54	BJ01-5 ,6
J01	S8	BJ01-19	BJ14-5	BJ17-2	K65	BJ01-3 ,4
J01	S9	BJ01-29	BJ15-18	BJ17-14	K53	BJ01-14,12
J01	S10	BJ01-17	BJ14-6	BJ16-15	K11	BJ01-1 ,2
J01	S11	BJ01-15	BJ15-37	BJ17-26	K41	BJ01-39,40
J01	S12	BJ01-25	BJ15-36	BJ17-15	K52	BJ01-38,36
J02	S1	BJ02-27	BJ14-12	BJ17-33	K34	BJ02-20,18
J02	S2	BJ02-23	BJ15-24	BJ17-22	K45	BJ02-16,14
J02	S3	BJ02-21	BJ15-23	BJ17-11	K56	BJ02-12,10
J02	S4	BJ02-19	BJ15-22	BJ16-26	K02	BJ02-7 ,8
J02	S5	BJ02-17	BJ15-21	BJ16-13	K13	BJ02-5 ,6
J02	S6	BJ02-15	BJ15-20	BJ17-32	K35	BJ02-1 ,2
J02	S7	BJ02-33	BJ14-13	BJ17-27	K40	BJ02-40,38
J02	S8	BJ02-29	BJ15-25	BJ16-25	K01	BJ02-22,24
J02	S9	BJ02-13	BJ15-19	BJ16-4	K24	BJ02-3 ,4
J02	S10	BJ02-31	BJ14-14	BJ17-16	K51	BJ02-36,34
J02	S11	BJ02-35	BJ15-37	BJ17-26	K41	BJ02-28,26
J02	S12	BJ02-37	BJ15-36	BJ17-15	K52	BJ02-32,30
J03	S1	BJ03-37	BJ14-13	BJ17-27	K40	BJ03-24,22
J03	S2	BJ03-33	BJ14-15	BJ17-5	K62	BJ03-16,14
J03	S3	BJ03-31	BJ14-16	BJ16-20	K08	BJ03-12,10
J03	S4	BJ03-35	BJ14-14	BJ17-16	K51	BJ03-20,18
J03	S5	BJ03-29	BJ14-17	BJ16-7	K19	BJ03-8 ,6
J03	S6	BJ03-27	BJ14-18	BJ17-37	K30	BJ03-4 ,2
J04	S1	BJ04-33	BJ15-26	BJ17-9	K58	BJ04-16,14
J04	S5	BJ04-31	BJ14-21	BJ17-6	K61	BJ04-28,26
J04	S6	BJ04-35	BJ15-27	BJ16-24	K04	BJ04-12,10
J04	S8	BJ04-19	BJ15-38	BJ16-19	K07	BJ04-20,18
J04	S9	BJ04-29	BJ14-22	BJ17-39	K28	BJ04-40,38
J04	S10	BJ04-27	BJ14-23	BJ17-28	K39	BJ04-36,34
J04	S11	BJ04-25	BJ14-24	BJ17-17	K50	BJ04-32,30
J04	S12	BJ04-23	BJ15-35	BJ17-4	K63	BJ04-4 ,2
J04	S15	BJ04-21	BJ15-36	BJ17-15	K52	BJ04-24,22
J05	S2	BJ05-23	BJ15-40	BJ17-35	K32	BJ05-30,28
J05	S3	BJ05-25	BJ14-1	BJ16-5	K21	BJ05-34,32
J05	S4	BJ05-27	BJ14-2	BJ16-18	K10	BJ05-38,36
J05	S7	BJ05-21	BJ15-32	BJ16-11	K15	BJ05-10,8
J05	S13	BJ05-19	BJ15-33	BJ16-21	K05	BJ05-1 ,2
J05	S14	BJ05-17	BJ15-34	BJ17-8	K59	BJ05-6 ,4
J06	S4	BJ06-33	BJ15-40	BJ17-35	K32	BJ06-32,30
J06	S6	BJ06-31	BJ14-1	BJ16-5	K21	BJ06-36,34
J06	S8	BJ06-29	BJ14-2	BJ16-18	K10	BJ06-40,38

Bicolor Board Schematic
by Switch

Switch		Switch In	Trigger Out	Bicolor In	Relay	LED Pins
J06	S2	BJ06-27	BJ14-29	BJ17-40	K27	BJ06-24,22
J06	S7	BJ06-35	BJ14-28	BJ16-12	K16	BJ06-28,26
J06	S10	BJ06-23	BJ14-31	BJ17-29	K38	BJ06-20,18
J06	S13	BJ06-21	BJ14-32	BJ17-18	K49	BJ06-16,14
J06	S3	BJ06-19	BJ14-33	BJ17-7	K60	BJ06-12,10
J06	S5	BJ06-37	BJ14-27	BJ16-22	K06	BJ06-8 ,6
J06	S1	BJ06-25	BJ14-30	BJ16-9	K17	BJ06-2 ,4
J07	S9	BJ07-27	BJ14-13	BJ17-27	K40	BJ07-2 ,4
J07	S12	BJ07-23	BJ14-34	BJ16-16	K12	BJ07-32,30
J07	S11	BJ07-25	BJ14-14	BJ17-16	K51	BJ07-6 ,8
J07	S15	BJ07-29	BJ15-25	BJ16-25	K01	BJ07-28,26
J07	S14	BJ07-35	BJ15-37	BJ17-26	K41	BJ07-22,24
J07	S16	BJ07-37	BJ15-36	BJ17-15	K52	BJ07-18,20
J07	S17	BJ07-31	BJ15-31	BJ16-2	K26	BJ07-16,14
J07	S18	BJ07-33	BJ15-30	BJ17-30	K37	BJ07-12,10
J08	S1	BJ08-19	BJ14-38	BJ17-21	K46	BJ08-16,14
J08	S4	BJ08-29	BJ15-29	BJ17-20	K47	BJ08-18,20
J08	S5	BJ08-33	BJ14-13	BJ17-27	K40	BJ08-40,38
J08	S6	BJ08-15	BJ14-40	BJ17-31	K36	BJ08-1 ,2
J08	S2	BJ08-25	BJ14-35	BJ16-1	K25	BJ08-3 ,4
J08	S3	BJ08-23	BJ14-36	BJ16-14	K14	BJ08-5 ,6
J08	S10	BJ08-21	BJ14-37	BJ17-10	K57	BJ08-12,10
J08	S7	BJ08-17	BJ14-39	BJ16-23	K03	BJ08-7 ,8
J08	S8	BJ08-31	BJ14-14	BJ17-16	K51	BJ08-36,34
J08	S9	BJ08-27	BJ14-34	BJ16-16	K12	BJ08-22,24
J08	S11	BJ08-35	BJ15-37	BJ17-26	K41	BJ08-28,26
J08	S12	BJ08-37	BJ15-36	BJ17-15	K52	BJ08-32,30
J09	S1	BJ09-35	BJ15-16	BJ17-36	K31	BJ09-24,22
J09	S2	BJ09-37	BJ15-15	BJ16-8	K20	BJ09-28,26
J09	S3	BJ09-31	BJ14-11	BJ16-6	K22	BJ09-20,18
J09	S4	BJ09-25	BJ14-8	BJ17-12	K55	BJ09-8 ,6
J09	S5	BJ09-29	BJ14-10	BJ17-34	K33	BJ09-16,14
J09	S6	BJ09-33	BJ14-12	BJ17-33	K34	BJ09-32,30
J09	S7	BJ09-27	BJ14-9	BJ17-23	K44	BJ09-12,10
J09	S8	BJ09-23	BJ14-7	BJ17-1	K66	BJ09-4 ,2
J10	S1	BJ10-35	BJ15-31	BJ16-2	K26	BJ10-5 ,6
J10	S2	BJ10-31	BJ15-32	BJ16-11	K15	BJ10-10,8
J10	S3	BJ10-23	BJ15-40	BJ17-35	K32	BJ10-30,28
J10	S4	BJ10-19	BJ15-26	BJ17-9	K58	BJ10-22,20
J10	S5	BJ10-15	BJ15-38	BJ16-19	K07	BJ10-26,24
J10	S6	BJ10-25	BJ14-1	BJ16-5	K21	BJ10-34,32
J10	S7	BJ10-21	BJ15-27	BJ16-24	K04	BJ10-14,12
J10	S8	BJ10-13	BJ15-29	BJ17-20	K47	BJ10-39,40
J10	S9	BJ10-27	BJ14-2	BJ16-18	K10	BJ10-38,36
J10	S10	BJ10-37	BJ15-30	BJ17-30	K37	BJ10-3 ,4
J10	S11	BJ10-17	BJ15-28	BJ17-19	K48	BJ10-1 ,2
J10	S12	BJ10-29	BJ15-36	BJ17-15	K52	BJ10-18,16
J11	S1	BJ11-21	BJ15-40	BJ17-35	K32	BJ11-1 ,2

Switch		Switch In	Trigger Out	Bicolor In	Relay	LED Pins
J11	S2	BJ11-19	BJ14-1	BJ16-5	K21	BJ11-3 ,4
J11	S3	BJ11-17	BJ14-2	BJ16-18	K10	BJ11-5 ,6
J11	S4	BJ11-27	BJ15-35	BJ17-4	K63	BJ11-34,32
J11	S5	BJ11-35	BJ15-15	BJ16-8	K20	BJ11-26,24
J11	S6	BJ11-37	BJ15-13	BJ17-25	K42	BJ11-18,16
J11	S7	BJ11-31	BJ15-17	BJ16-17	K09	BJ11-30,28
J11	S8	BJ11-33	BJ15-16	BJ17-36	K31	BJ11-22,20
J11	S9	BJ11-29	BJ15-18	BJ17-14	K53	BJ11-14,12
J11	S10	BJ11-23	BJ15-39	BJ17-3	K64	BJ11-10,8
J11	S11	BJ11-15	BJ15-37	BJ17-26	K41	BJ11-39,40
J11	S12	BJ11-25	BJ15-36	BJ17-15	K52	BJ11-38,36
J12	S1	BJ12-37	BJ14-19	BJ17-38	K29	BJ12-4 ,2
J12	S2	BJ12-35	BJ14-20	BJ16-10	K18	BJ12-8 ,6
J12	S3	BJ12-33	BJ15-38	BJ16-19	K07	BJ12-18,16
J13	S1	BJ13-37	BJ14-27	BJ16-22	K06	BJ13-38,36
J13	S2	BJ13-35	BJ14-26	BJ16-3	K23	BJ13-34,32
J13	S3	BJ13-33	BJ14-25	-		BJ13-30,28

DUMP VALUES ON SHADE BOARD

18 ga - ground from TB3-6 to P7
18 ga - red from CB45 to P12, P14, P5 (jumpers)
18 ga - red from K23B #1+8 to P6
18 ga. red from K24B #1+8 to P13
22 ga. white from K23A-A1 to P1
22 ga. white from K24A-A1 to P8

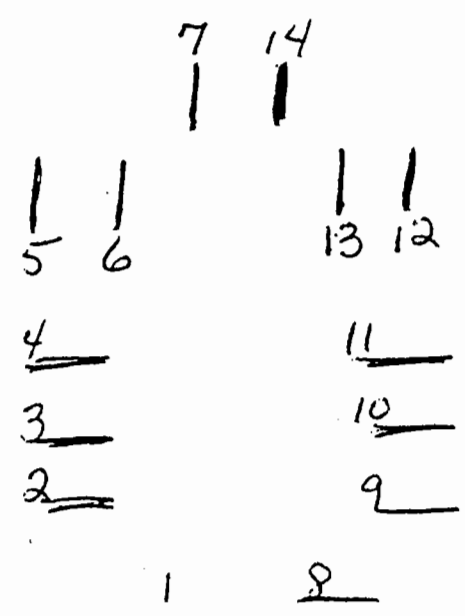

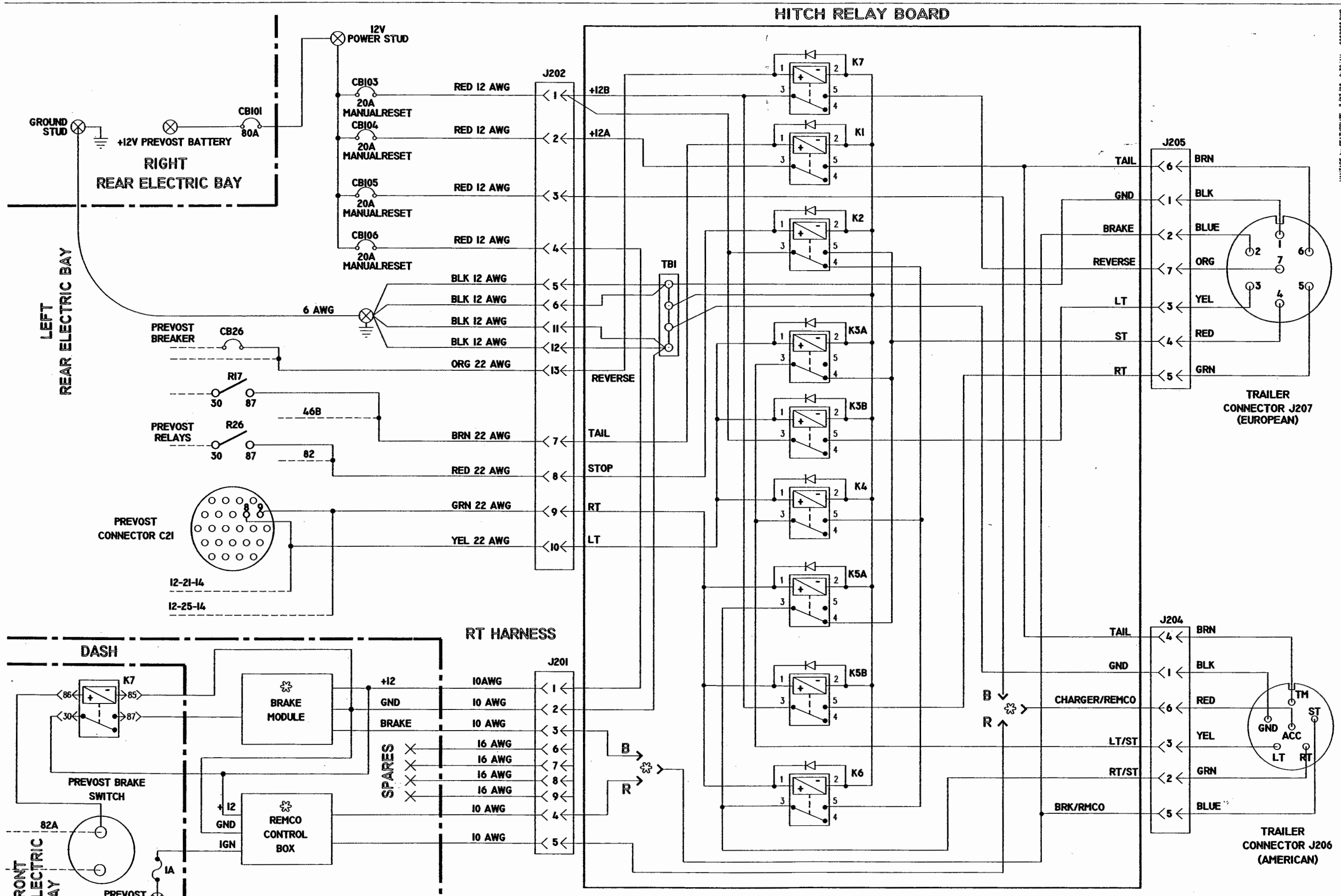

REV	DATE	BY	REVISION DESCRIPTION
F	2/7/02	KSL	REPLACED CB105 & 106 AUTO-RESET w/MANUAL RESET
E	10/7/99	HK	FIX BRAKE/REMCO JUMPER, RELAYS
D	10/21/98	JH	ADD SUPPRESSION DIODES.
C	9/24/98	JH	ADD REVERSE, ORG 22AWG
B	8/14/98	JH	J202, -11/12, SPLIT POWER WIRES, NO GAUGES
A	8/30/98	TT	UPDATED TO 7 PIN PLUG AND NEW WIRING HARNESS

VANTARE by FEATHERLITE 7/27/98 8:30 AM 9060006.DWG

VANTARE
by FEATHERLITE
1550 DOLGNER PLACE
PORT OF SANFORD
SANFORD, FLORIDA 32771-8519
TEL 407-323-1120 FAX 407-323-1945

CHASSIS

SCALE NTS

DATE 7-22-98

DRAWN BY R.K.

CHKED BY KSL

APPROVED

APPROVED

APPROVED

APPROVED

APPROVED

SCHEMATIC, TRAILER/TOW VEHICLE WIRING

REVISION E

DRAWING NO. 9060006

SHEET 1 OF 1

REVISIONS			
REV.	DESCRIPTION	DATE	APPROVAL
A	EFECTIVE #3304-ON (DELETE-OLD-XL-REF'S)	10/2/98	
B	UPDATE-RED/GRN-BI-COLOR REFORMATTED	02/28/01	TED
C	Vendor change, aligned trigger and motor feeds.	9/25/03	MJF

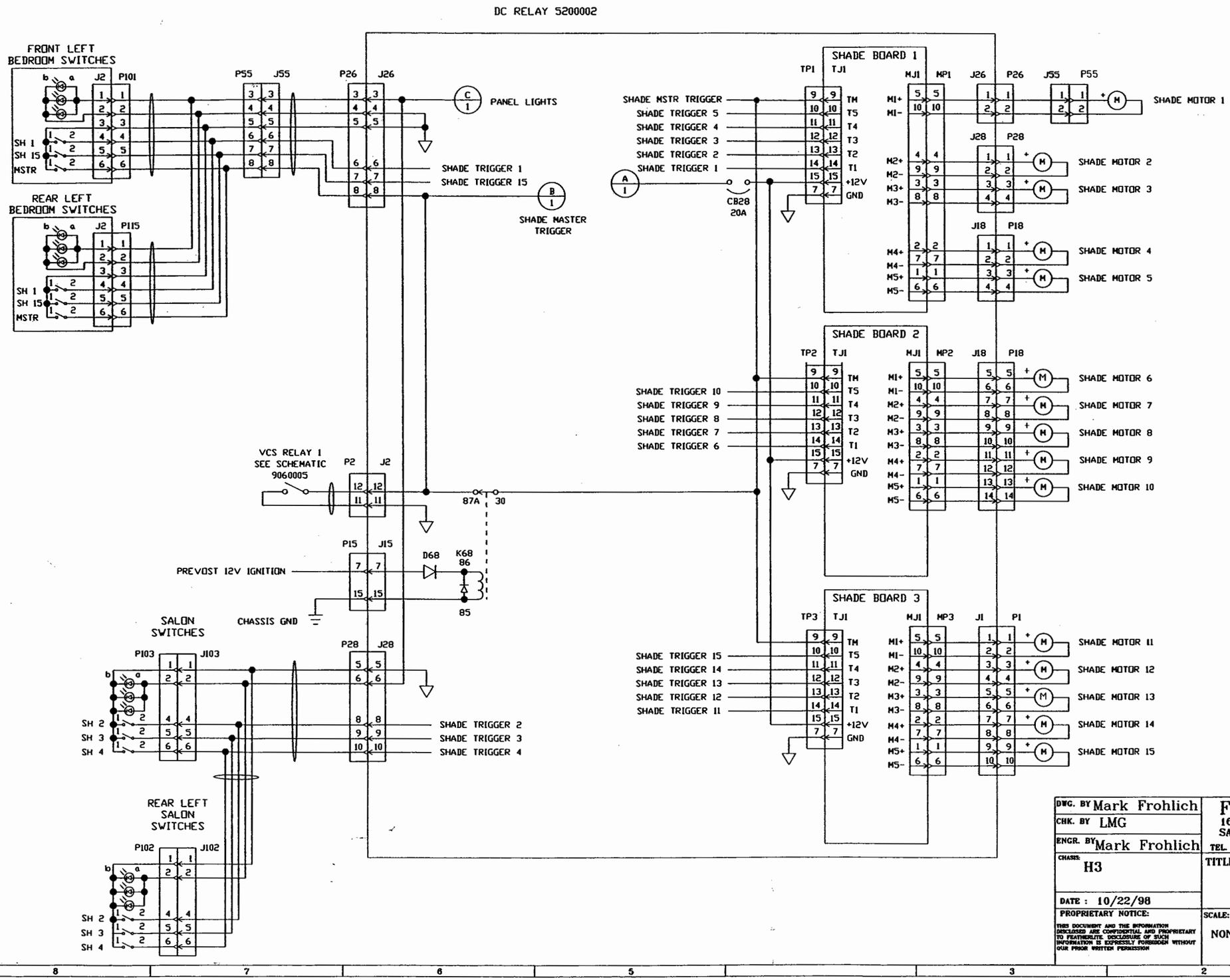

DWG. BY Mark Frohlich
CHK. BY LMG
ENGR. BY Mark Frohlich
CHASSIS: H3
DATE : 10/22/98

PROPRIETARY NOTICE:
THIS DOCUMENT AND THE INFORMATION DISCLOSED ARE CONFIDENTIAL AND PROPRIETARY TO FEATHERLITE. DISCLOSURE OF SUCH INFORMATION IS EXPRESSLY FORBIDDEN WITHOUT OUR PRIOR WRITTEN PERMISSION

FEATHERLITE
1601 DOLGNER PL
SANFORD FLA 32771
TEL. 1-407-323-1120 FAX 1-407-323-1945

TITLE:
SCHEMATIC,SOMFY,SHADE-BOARD
H3

SCALE: NONE
DRAWING NO.: 9060014
DRAWING FILE # 9060014-02C.DWG
SHEET: 2 OF 2
REV C

REVISIONS			
REV.	DESCRIPTION	DATE	APPROVAL
A	EFECTIVE.#3304-ON (DELETE-OLD-XL-REF'S)	10/3/98	
B	UPDATE-RED/GRN-BI-COLOR REFORMATTED	08/30/01	TED
C	Vendor change, aligned trigger and motor feeds.	9/25/03	MJF

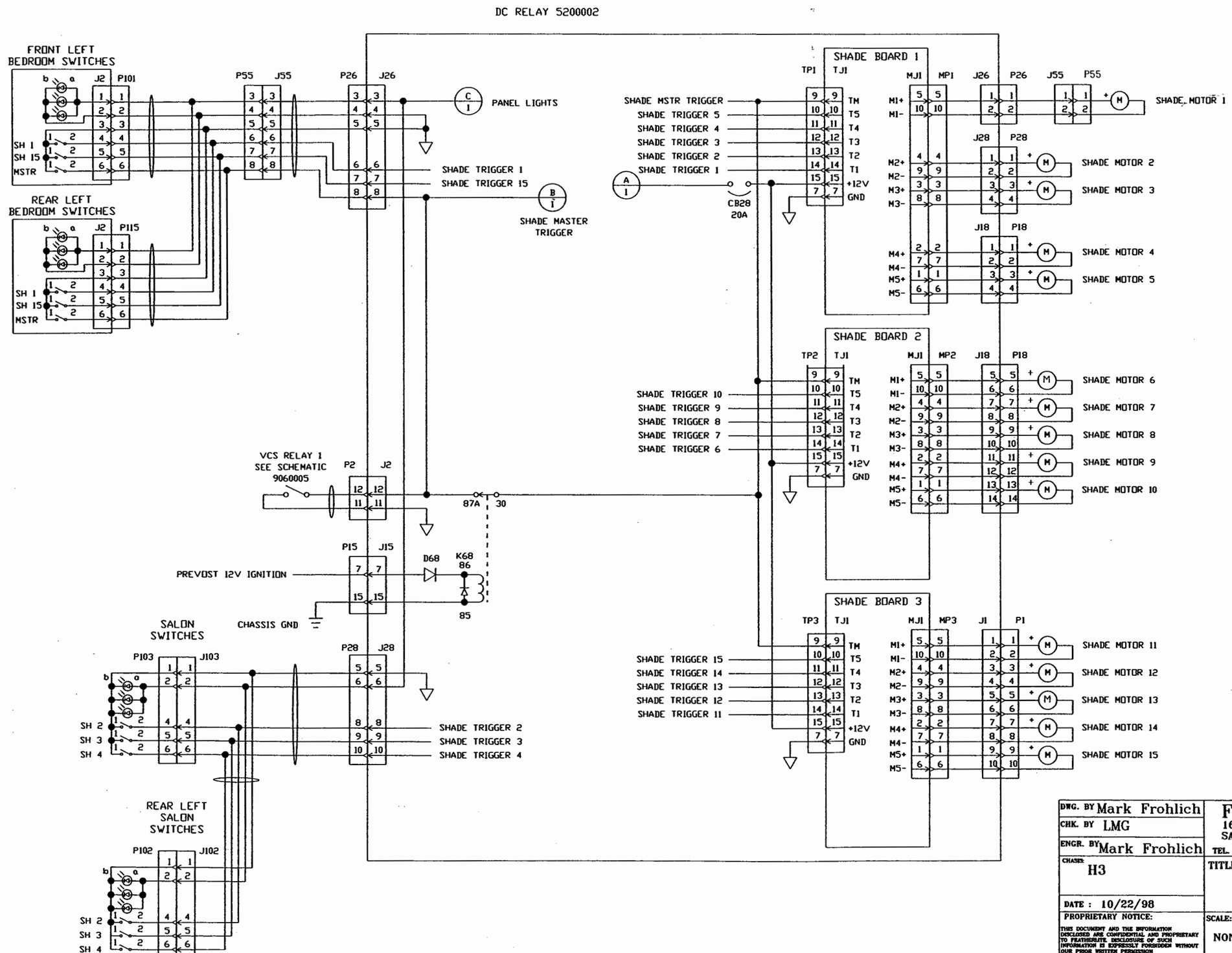

DWG. BY Mark Frohlich
CHK. BY LMG
ENGR. BY Mark Frohlich
CHASSIS H3
DATE : 10/22/98

PROPRIETARY NOTICE:
THIS DOCUMENT AND THE INFORMATION DISCLOSED ARE CONFIDENTIAL AND PROPRIETARY TO FEATHERLITE. DISCLOSURE OF SUCH INFORMATION IS EXPRESSLY FORBIDDEN WITHOUT OUR PRIOR WRITTEN PERMISSION

FEATHERLITE
1601 DOLGNER PL.
SANFORD FLA 32771
TEL. 1-407-323-1120 FAX 1-407-323-1945

TITLE:
SCHEMATIC,SOMFY,SHADE-BOARD
H3

SCALE: NONE
DRAWING NO.: 9060014
DRAWING FILE # 9060014-02C.DWG
SHEET: 2 OF 2
REV C

NOTE — INTERPRET ALL DRAWINGS IN ACCORDANCE WITH ANSI Y14.5-1982
1 REMOVE ALL SHARP EDGES

REVISIONS			
	DESCRIPTION	DATE	APPROVAL
H	REPLACED K3 & K4 w/ TELEMECANIQUE 4pS RELAY WIRED UP/DOWN LIMIT SWITCHES N.O.	9/10/02	KSL
H	REMOVED UP-LEFT & DOWN LEFT LIMIT SWITCHES RE-NUMBERED SWITCHES	9/10/02	KSL
I	CHANGED MOTOR RELAYS FROM 12VDC TO 24VDC	2/28/03	KSL
J			

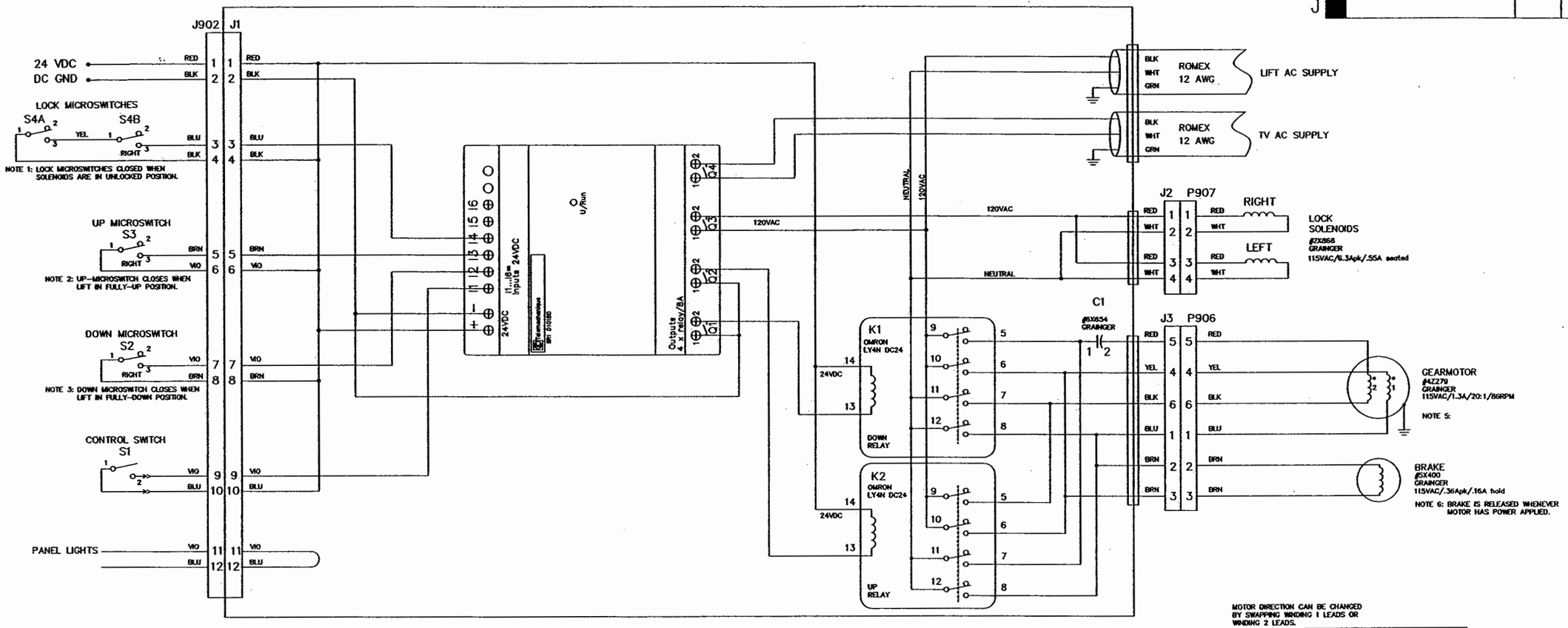

MOTOR DIRECTION CAN BE CHANGED BY SWAPPING WINDING 1 LEADS OR WINDING 2 LEADS.

J4
CONTROL SWITCH

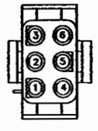

LIFT OPERATION:

1. BOTH LOCKS MUST BE IN THE UNLOCKED POSITION BEFORE THE UP OR DOWN RELAY CAN BE ACTIVATED.
2. S4A & S4B CLOSE WHEN THE LOCKS ARE IN THE RETRACTED POSITION.
3. S3 CLOSES WHEN THE LIFT HAS REACHED THE UP POSITION.
4. S2 CLOSES WHEN THE LIFT HAS REACHED THE DOWN POSITION.
5. S1 IS THE OPERATIONAL UP/DOWN CONTROL SWITCH.
   A. PRESSING THE SWITCH ONCE WILL INITIATE MOVEMENT UP OR DOWN.
   B. PRESSING THE SWITCH AGAIN WILL STOP MOVEMENT, AS WILL THE UP/DOWN-LIMIT SWITCHES.
   C. PRESSING THE SWITCH AGAIN WILL REVERSE DIRECTION.

J1
MICROSWITCH/CONTROL

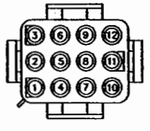

J2
LOCK SOLENOIDS

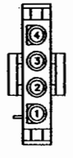

J3
MOTOR/BRAKE

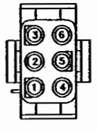

J4
CONTROL SWITCH

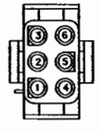

S2-S4B
MICROSWITCHES

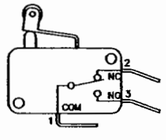

OMRON V-15G5-1C25-K 0.1A/125VDC

S1
CONTROL SWITCH

BOTTOM VIEW

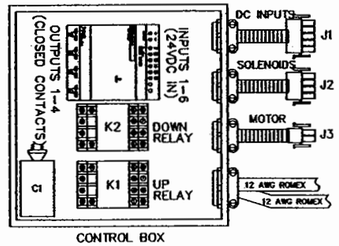

CONTROL BOX

HARDWARE LIST

ITEM	MATERIAL FINISH

CUSTOMER NAME:

CUSTOMER APPROVAL & DATE:

PRELIMINARY
THE INFORMATION CONTAINED ON THIS DRAWING IS PRELIMINARY AND IS FOR REVIEW AND EVALUATION PURPOSES ONLY NO PARTS ARE TO BE MANUFACTURED FROM THIS DRAWING

THIRD ANGLE PROJECTION

DO NOT SCALE DRAWING

TOLERANCES UNLESS OTHERWISE SPECIFIED:
ANGLES: ± 1/4°
FRACTIONS: ±1/64
DECIMALS: XX ±.010
DECIMALS: XXX ±.005

QTY	ITEM	PART NUMBER	DESCRIPTION	MATERIAL STOCK SIZE

DWG. BY KSL

CHK. BY

ENGR. BY KSL

CHASIS:

DATE : 4/7/99

PROPRIETARY NOTICE:
THIS DOCUMENT AND THE INFORMATION DISCLOSED ARE CONFIDENTIAL AND PROPRIETARY TO FEATHERLITE. DISCLOSURE OF SUCH INFORMATION IS EXPRESSLY FORBIDDEN WITHOUT OUR PRIOR WRITTEN PERMISSION

FEATHERLITE
1601 DOLGNER PL
SANFORD FLA 32771
TEL. 1-407-323-1120 FAX 1-407-323-1945

TITLE:
TV LIFT
ONE BUTTON CONTROL

SCALE: N/A

DRAWING NO.: 9060022I

REV I

DRAWING FILE # 9060022

SHEET: 1 OF 1

REVISIONS				
ZONE	REV	DESCRIPTION	DATE	APPROVED
	A	POS. STARTER CONNECTION MOVED TO BUS BAR OF CUTOUT RELAY CONTACT	7/15/99	
	B	CHANGED INPUT VOLTS FROM 24VDC TO 12VDC FOR BATTERY CHARGER K4 RELAY. LABELED LLNS INPUT (D)	8/27/99	
	C	SWITCHED TO DELCO REMY VOLTAGE REGULATOR	1/24/00	

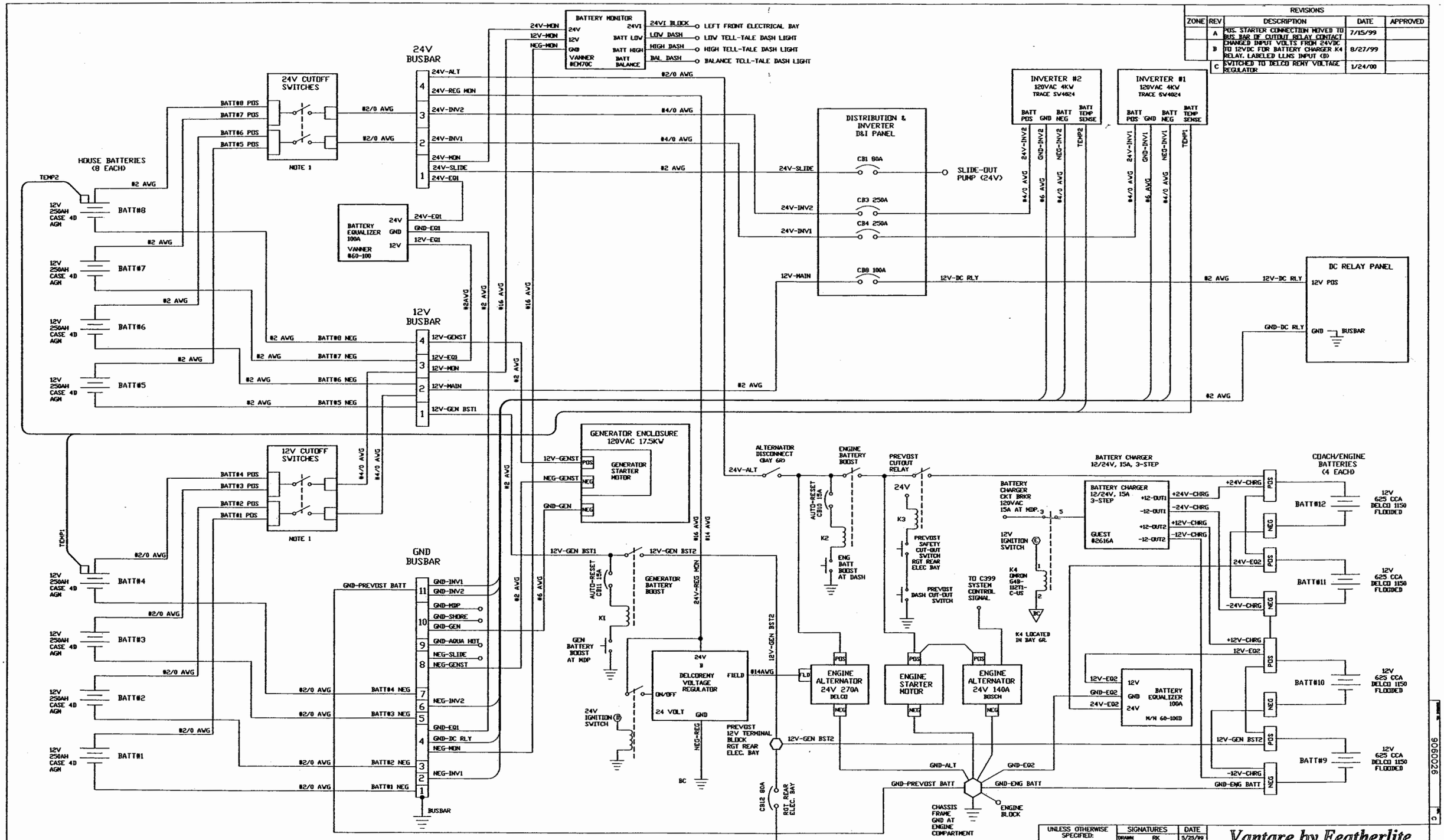

NOTE 1: 12V & 24V CUTOFF SWITCHES MUST BOTH BE ON OR OFF. IF ONE IS OFF & THE OTHER IS ON, THEN UNBALANCED DISCHARGE WILL RESULT. ONE BATTERY BANK WILL OVERCHARGE WHILE THE OTHER BATTERY BANK COMPLETES ITS CHARGING CYCLE. THIS WILL CAUSE OVERHEATING OF THE OVERCHARGED BATTERY BANK & WILL DECREASE ITS BATTERY LIFE.

NOTE 2: REFER TO MPP 20004 - DC BUS BAR INSTALLATION PROCEDURE,
MPP 20012 - GROUND BUSBAR INSTALLATION PROCEDURE,
MPP 20016-LUGS, CRIMPING & CONNECTING PROCEDURE,
MPP 20043-LIFELINE NEXTSTEP VOLTAGE REGULATOR INSTALLATION PROCEDURE.
COACH SPECIFIC WIRE LIST FOR OTHER WIRE SIZES.

NEXT ASSY:
WIRE LIST:
PARTS LIST:

UNLESS OTHERWISE SPECIFIED:
TOLERANCES:
.XX = ±
.XXX = ±
ANGLES = ±1°
DIMENSIONS ARE IN INCHES.
DO NOT SCALE DRAWING.

SIGNATURES		DATE
DRAWN	RK	5/25/99
CHECKED		
ENGINEER		
ISSUED		
MATERIAL		
FINISH		

Vantare by Featherlite

SCHEMATIC, 12 & 24 VDC DISTRIBUTION
DUAL ALTERNATOR, NON-BUS A/C

DRAWING NO. 9060026 REV. C

SCALE N/A | FILE NO. 9060026C | SHEET 1 OF 1

NOTE — INTERPRET ALL DRAWINGS IN ACCORDANCE WITH ANSI Y14.5-1982
USED FROM COACH # 7202 ON, INCLUDING #3913, #4085

REVISIONS			
REV.	DESCRIPTION	DATE	APPROVAL
A	Added Kt. and wiring Reformated DRawing	12/01/00	TED
B	Added new Phase loss & Meter Assembly module	03/30/01	TED
C			
D			

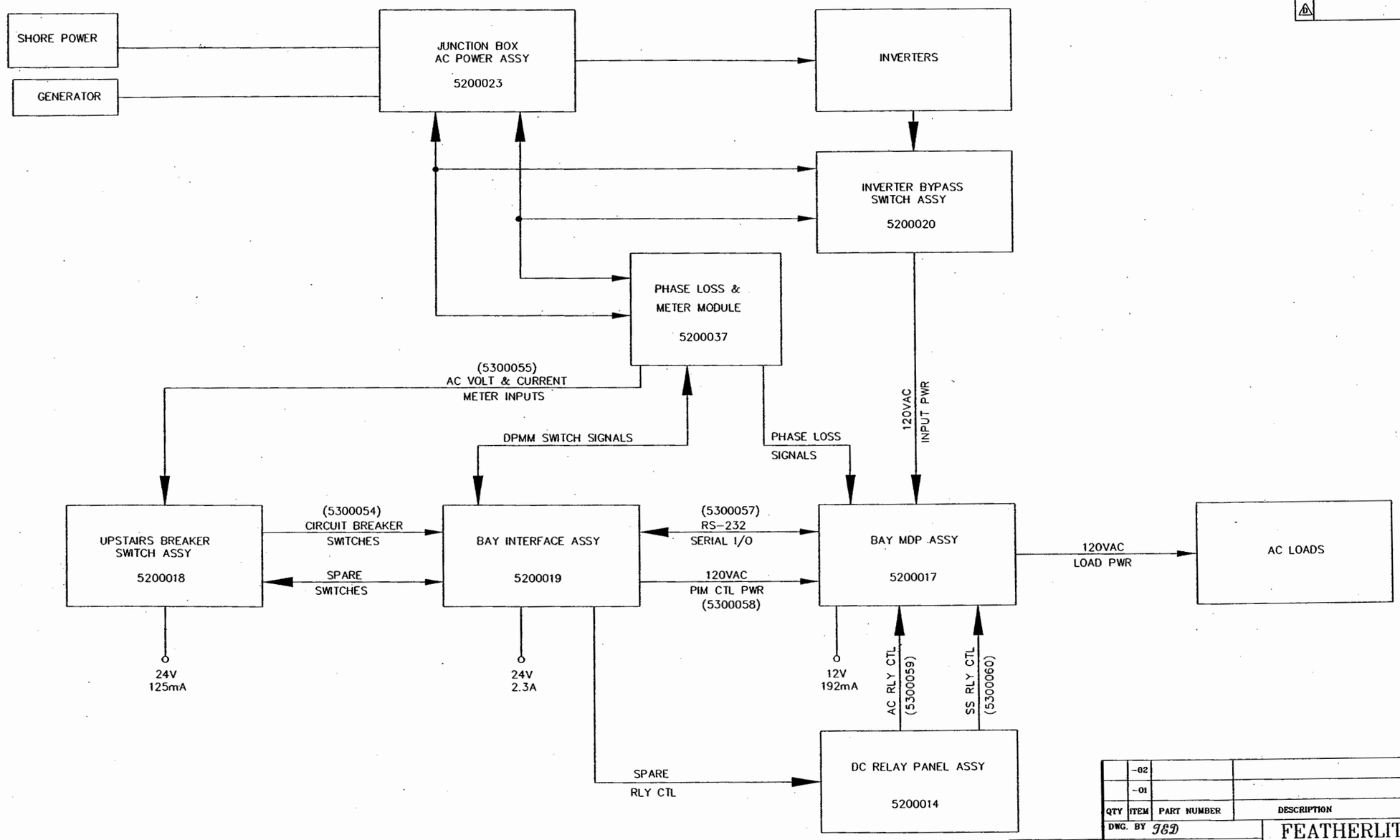

QTY	ITEM	PART NUMBER	DESCRIPTION	MATERIAL STOCK SIZE
	-02			
	-01			

HARDWARE BILL OF MATERIAL

ITEM	MATERIAL FINISH
9060027	

CUSTOMER NAME:

CUSTOMER APPROVAL & DATE:

THIRD ANGLE PROJECTION

DO NOT SCALE DRAWING

TOLERANCES UNLESS OTHERWISE SPECIFIED:
ANGLES: ± 1/4°
FRACTIONS: ±1/64
DECIMALS: XX ±.010
DECIMALS: XXX ±.005

5200029

DWG. BY TED

CHK. BY RK

ENGR. BY RK

CHASIS:

DATE : 12/01/00

PROPRIETARY NOTICE:

THIS DOCUMENT AND THE INFORMATION DISCLOSED ARE CONFIDENTIAL AND PROPRIETARY TO FEATHERLITE. DISCLOSURE OF SUCH INFORMATION IS EXPRESSLY FORBIDDEN WITHOUT OUR PRIOR WRITTEN PERMISSION

FEATHERLITE
1601 DOLGNER PL
SANFORD FLA 32771
TEL. 1-407-323-1120 FAX 1-407-323-1945

TITLE:
BLOCK DIAGRAM, AC LOAD CENTER
ASSEMBLY H3

SCALE: NONE

DRAWING NO.: 9060027

DRAWING FILE # 9060027J

SHEET: 1 OF 2

REV J

NOTE — INTERPRET ALL DRAWINGS IN ACCORDANCE WITH ANSI Y14.5-1982

REVISIONS			
REV.	DESCRIPTION	DATE	APPROVAL
A	Added K1, and wiring Reformated DRawing	12/01/00	TED
B	Added Phase loss and meter Assembly Module	03/30/01	TED
C			
D			

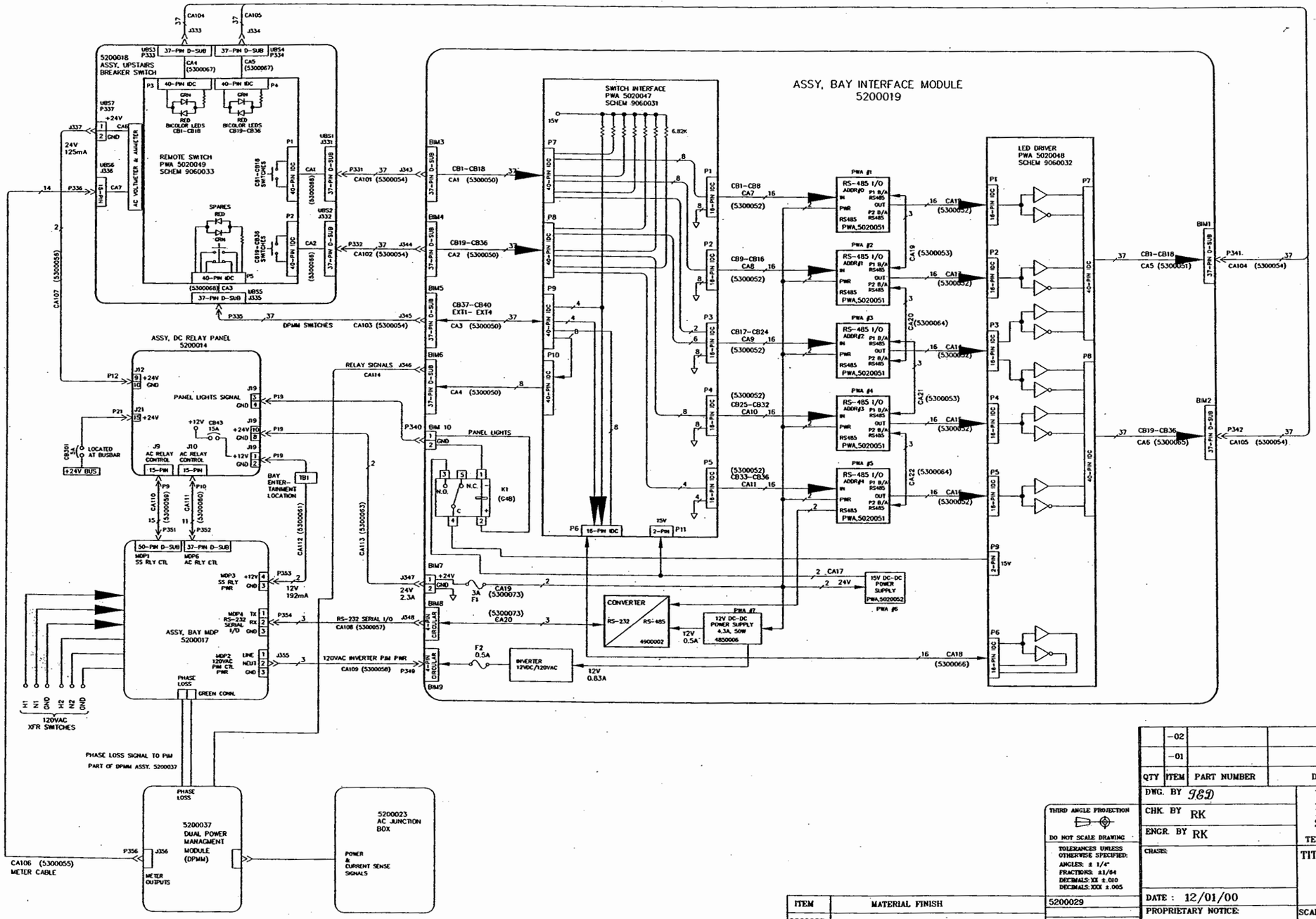

QTY	ITEM	PART NUMBER	DESCRIPTION	MATERIAL STOCK SIZE
	-02			
	-01			

HARDWARE BILL OF MATERIAL

ITEM	MATERIAL FINISH
9060027	

CUSTOMER NAME:

CUSTOMER APPROVAL & DATE:

THIRD ANGLE PROJECTION

DO NOT SCALE DRAWING

TOLERANCES UNLESS OTHERWISE SPECIFIED:
ANGLES: ± 1/4°
FRACTIONS: ±1/64
DECIMALS: XX ±.010
DECIMALS: XXX ±.005

5200029

DWG. BY JGD

CHK. BY RK

ENGR. BY RK

CHASIS:

DATE : 12/01/00

PROPRIETARY NOTICE:

THIS DOCUMENT AND THE INFORMATION DISCLOSED ARE CONFIDENTIAL AND PROPRIETARY TO FEATHERLITE. DISCLOSURE OF SUCH INFORMATION IS EXPRESSLY FORBIDDEN WITHOUT OUR PRIOR WRITTEN PERMISSION

FEATHERLITE
1601 DOLGNER PL
SANFORD FLA 32771
TEL. 1-407-323-1120 FAX 1-407-323-1945

TITLE:

BLOCK DIAGRAM, AC LOAD CENTER
ASSEMBLY H3

SCALE: NONE

DRAWING NO.: 9060027

DRAWING FILE # 9060027J

SHEET: 2 OF 2

REV J

REVISIONS			
REV.	DESCRIPTION	DATE	APPROVAL
-	INITIAL RELEASE	7/6/99	RK

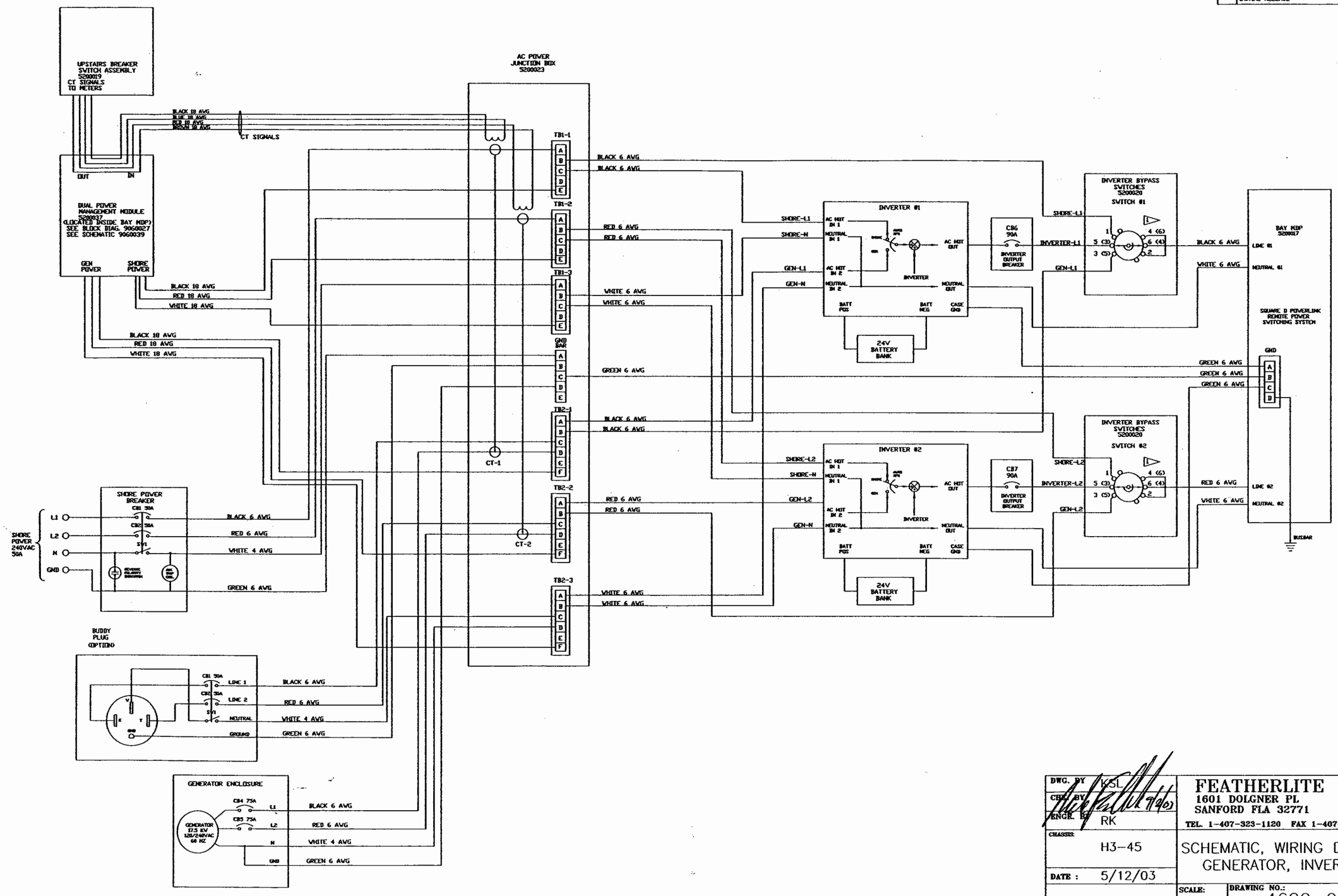

NOTES: 1 PIN NUMBERS IN PARENTHESIS ARE FOR THE 3 POSITION SWITCH

CUSTOMER NAME:	SANIBEL I
CUSTOMER APPROVAL & DATE:	

DWG. BY: KSL
CHK. BY:
ENGR. BY: RK
CHASSIS: H3-45
DATE: 5/12/03

FEATHERLITE
1601 DOLGNER PL
SANFORD FLA 32771
TEL. 1-407-323-1120 FAX 1-407-323-1945

SCHEMATIC, WIRING DIAGRAM, SHORE, GENERATOR, INVERTER, BAY MDP

SCALE: NONE
DRAWING NO.: 4620-9060030
REV: —
DRAWING FILE #: 4569-030.DWG
SHEET 1 OF 1

NOTE — INTERPRET ALL DRAWINGS IN ACCORDANCE WITH ANSI Y14.5-1982

1 REMOVE ALL SHARP EDGES

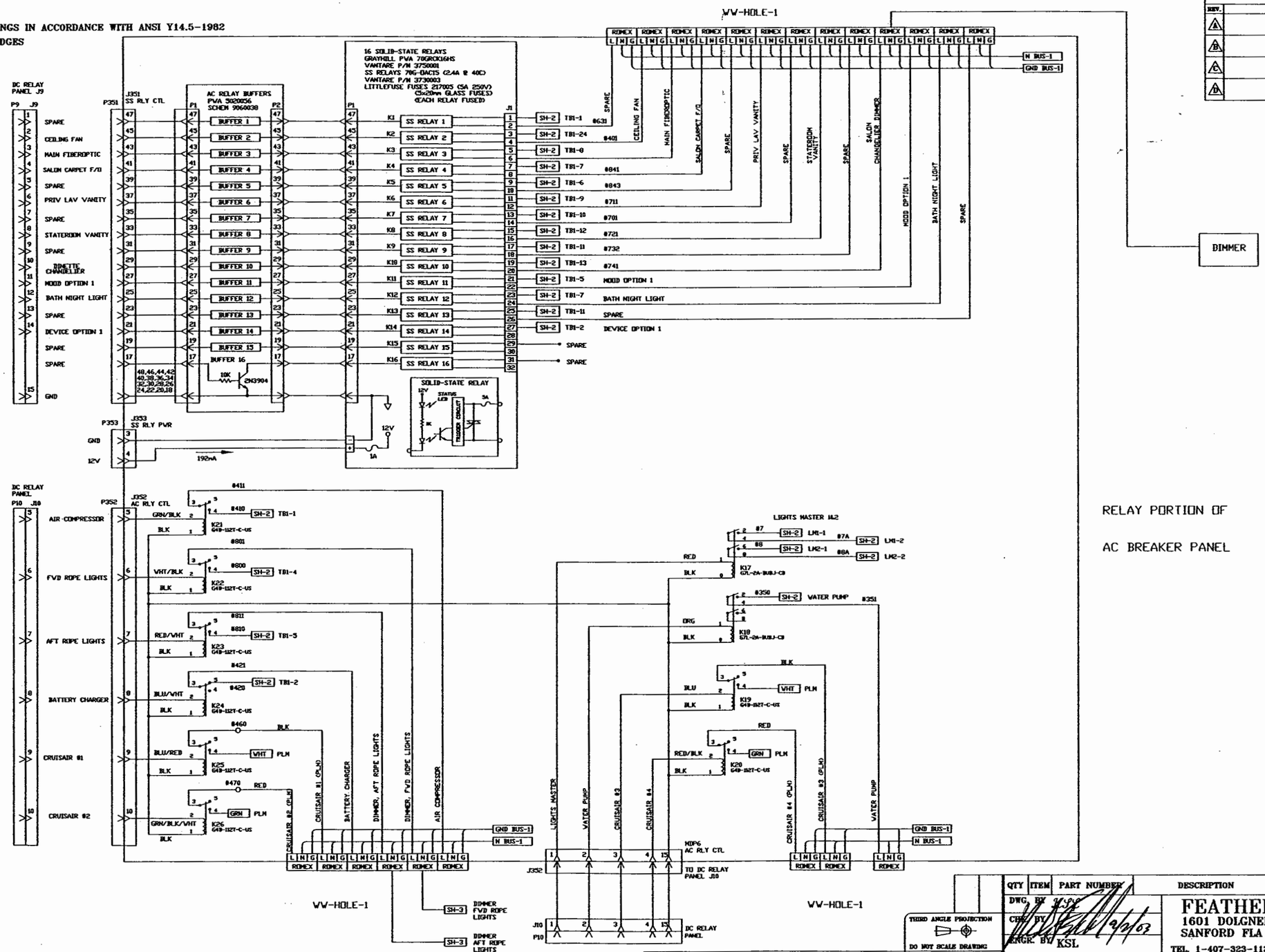

RELAY PORTION OF

AC BREAKER PANEL

REVISIONS

REV.	DESCRIPTION	DATE	APPROVAL
A			
B			
C			
D			

HARDWARE LIST

QTY	ITEM	PART NUMBER	DESCRIPTION	MATERIAL STOCK SIZE

ITEM	MATERIAL FINISH

CUSTOMER NAME: SANIBEL I

CUSTOMER APPROVAL & DATE:

THIRD ANGLE PROJECTION

DO NOT SCALE DRAWING

TOLERANCES UNLESS OTHERWISE SPECIFIED:
ANGLES: ± 1/4°
FRACTIONS: ±1/64
DECIMALS: XX ±.010
DECIMALS: XXX ±.005

DWG. BY
CHK. BY 2/21/03
ENGR. BY KSL

CHASSIS: H3 45-S2

DATE : 7/30/03

PROPRIETARY NOTICE:

THIS DOCUMENT AND THE INFORMATION DISCLOSED ARE CONFIDENTIAL AND PROPRIETARY TO FEATHERLITE. DISCLOSURE OF SUCH INFORMATION IS EXPRESSLY FORBIDDEN WITHOUT OUR PRIOR WRITTEN PERMISSION

FEATHERLITE
1601 DOLGNER PL
SANFORD FLA 32771
TEL. 1-407-323-1120 FAX 1-407-323-1945

TITLE:
BLOCK DIAGRAM, A.C. BAY MDP MODULE

SCALE: N/A

DRAWING NO.: S I-4620-9060039

DRAWING FILE # S I-4620-9060039

SHEET: 1 OF 4

REV —

NOTE — INTERPRET ALL DRAWINGS IN ACCORDANCE WITH ANSI Y14.5-1982
1 REMOVE ALL SHARP EDGES

REVISIONS			
REV.	DESCRIPTION	DATE	APPROVAL
A			
B			
C			
D			

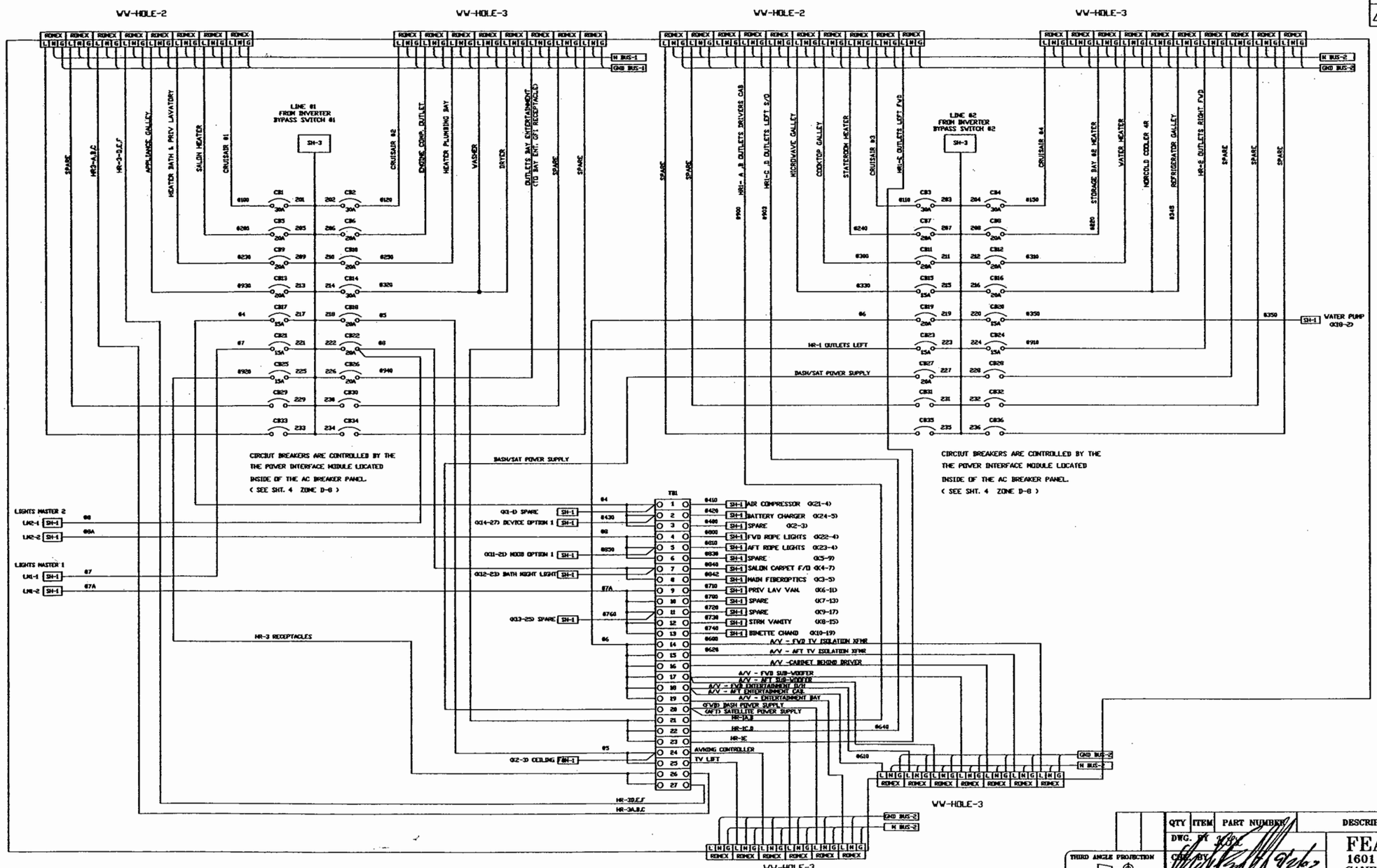

HARDWARE LIST

QTY	ITEM	PART NUMBER	DESCRIPTION	MATERIAL STOCK SIZE

DWG. BY
CHK. BY
ENGR. BY KSL

THIRD ANGLE PROJECTION
DO NOT SCALE DRAWING

TOLERANCES UNLESS OTHERWISE SPECIFIED:
ANGLES: ± 1/4°
FRACTIONS: ±1/64
DECIMALS: XX ±.010
DECIMALS: XXX ±.006

ITEM	MATERIAL FINISH

CUSTOMER NAME: SANIBEL I
CUSTOMER APPROVAL & DATE:

FEATHERLITE
1601 DOLGNER PL
SANFORD FLA 32771
TEL. 1-407-323-1120 FAX 1-407-323-1945

CHASE: H3 45-S2

DATE : 7/30/03

TITLE: BLOCK DIAGRAM, A.C. BAY MDP MODULE

PROPRIETARY NOTICE: THIS DOCUMENT AND THE INFORMATION DISCLOSED ARE CONFIDENTIAL AND PROPRIETARY TO FEATHERLITE. DISCLOSURE OF SUCH INFORMATION IS EXPRESSLY FORBIDDEN WITHOUT OUR PRIOR WRITTEN PERMISSION

SCALE: N/A

DRAWING NO.: S I-4620-9060039

REV: —

DRAWING FILE # S I-4620-9060039

SHEET: 2 OF 4

FORM: 10W-0820M

NOTE — INTERPRET ALL DRAWINGS IN ACCORDANCE WITH ANSI Y14.5-1982
1 REMOVE ALL SHARP EDGES

REVISIONS			
REV.	DESCRIPTION	DATE	APPROVAL
A			
B			
C			
D			

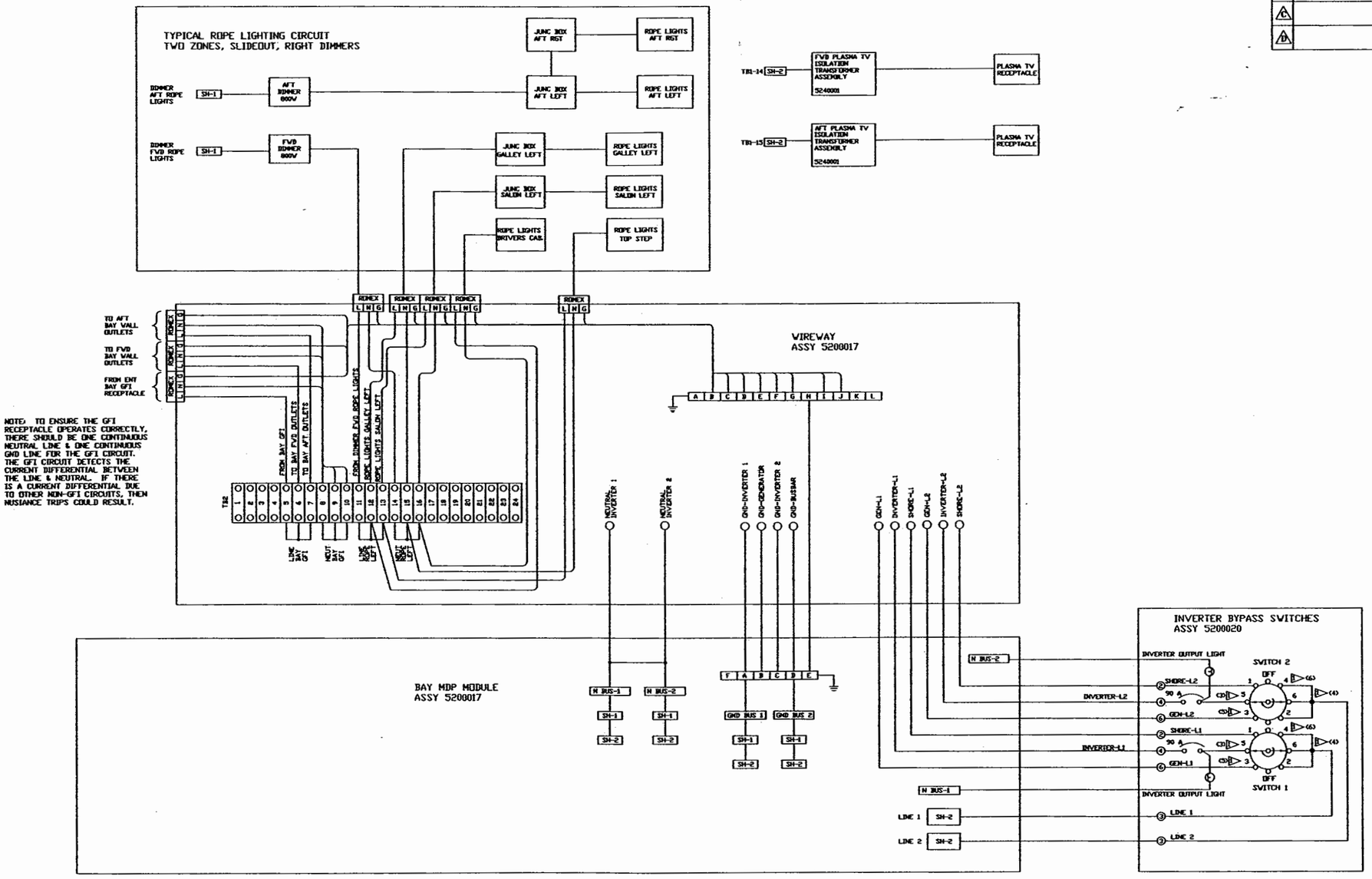

NOTES: 1 4 POSITION SWITCH SHOWN; PIN NUMBER FOR 3 POSITION SWITCH IS IN PARENTHESIS

HARDWARE LIST

QTY	ITEM	PART NUMBER	DESCRIPTION	MATERIAL STOCK SIZE

ITEM	MATERIAL FINISH

CUSTOMER NAME: SANIBEL I
CUSTOMER APPROVAL & DATE:

THIRD ANGLE PROJECTION
DO NOT SCALE DRAWING
TOLERANCES UNLESS OTHERWISE SPECIFIED:
ANGLES: ± 1/4°
FRACTIONS: ±1/64
DECIMALS: XX ±.010
DECIMALS: XXX ±.005

DWG. BY KSL
CHK. BY 9/2/03
ENGR. BY KSL
CHASIS: H3 45-S2
DATE : 7/30/03

PROPRIETARY NOTICE:
THIS DOCUMENT AND THE INFORMATION DISCLOSED ARE CONFIDENTIAL AND PROPRIETARY TO FEATHERLITE. DISCLOSURE OF SUCH INFORMATION IS EXPRESSLY FORBIDDEN WITHOUT OUR PRIOR WRITTEN PERMISSION

FEATHERLITE
1601 DOLGNER PL
SANFORD FLA 32771
TEL. 1-407-323-1120 FAX 1-407-323-1945

TITLE:
BLOCK DIAGRAM, A.C. BAY MDP MODULE

SCALE: N/A
DRAWING NO.: S I-4620-9060039
REV —
DRAWING FILE # S I-4620-9060039
SHEET: 3 OF 4

NOTE — INTERPRET ALL DRAWINGS IN ACCORDANCE WITH ANSI Y14.5-1982

1 REMOVE ALL BREAKERS

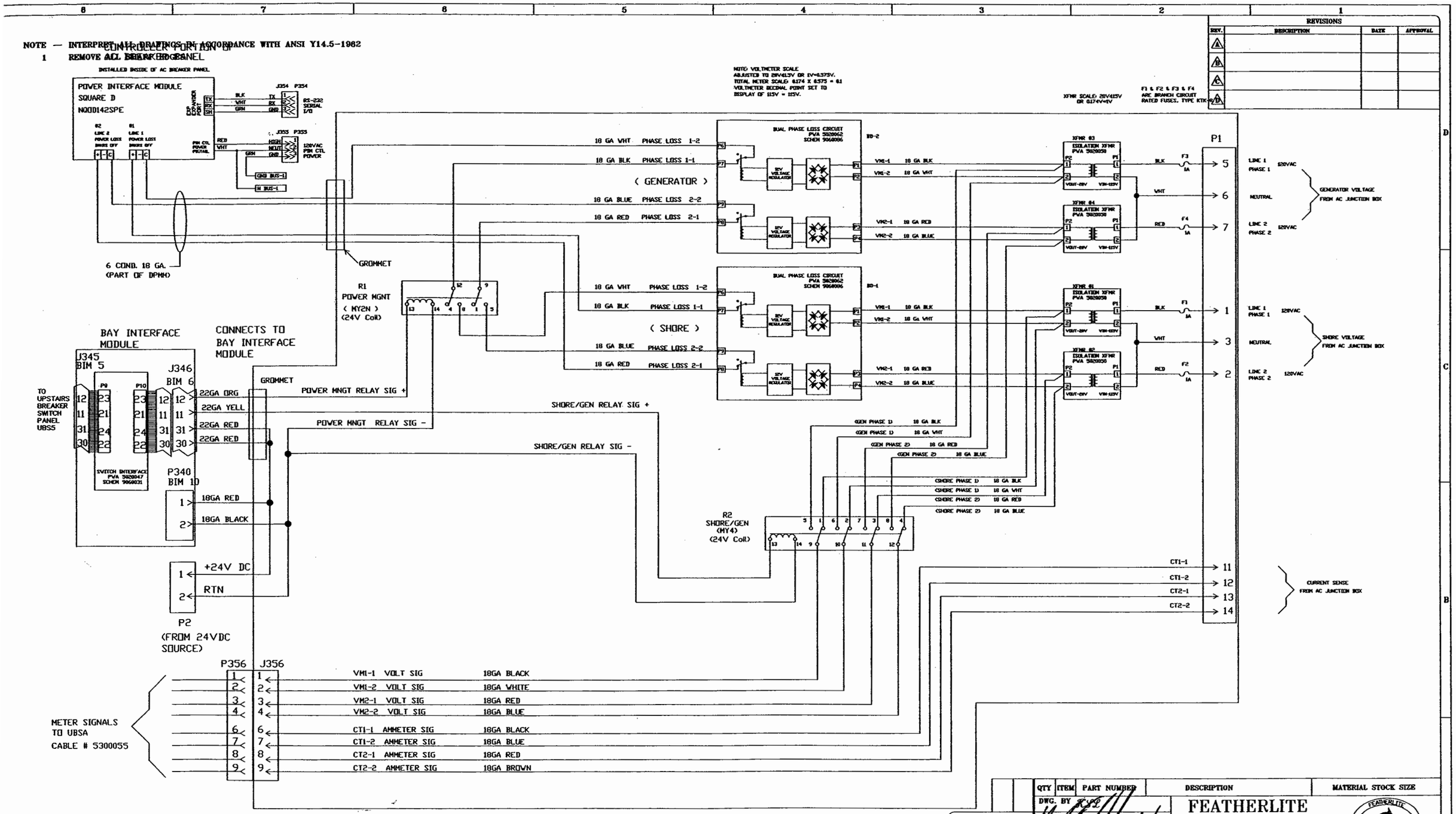

DUAL POWER MANAGEMENT MODULE 5200037

HARDWARE LIST

REV.	DESCRIPTION	DATE	APPROVAL
A			
B			
C			
D			

QTY	ITEM	PART NUMBER	DESCRIPTION	MATERIAL STOCK SIZE

THIRD ANGLE PROJECTION

DO NOT SCALE DRAWING

TOLERANCES UNLESS OTHERWISE SPECIFIED:
ANGLES: ± 1/4°
FRACTIONS: ±1/64
DECIMALS: XX ±.010
DECIMALS: XXX ±.005

ITEM	MATERIAL FINISH

CUSTOMER NAME: SANIBEL I

CUSTOMER APPROVAL & DATE:

DWG. BY
CHK. BY
ENGR. BY KSL 8/2/03

CHASIS: H3 45-S2

DATE : 7/30/03

PROPRIETARY NOTICE:
THIS DOCUMENT AND THE INFORMATION DISCLOSED ARE CONFIDENTIAL AND PROPRIETARY TO FEATHERLITE. DISCLOSURE OF SUCH INFORMATION IS EXPRESSLY FORBIDDEN WITHOUT OUR PRIOR WRITTEN PERMISSION

FEATHERLITE
1601 DOLGNER PL
SANFORD FLA 32771
TEL. 1-407-323-1120 FAX 1-407-323-1945

TITLE:
BLOCK DIAGRAM, A.C. BAY MDP MODULE

SCALE: N/A

DRAWING NO.: S I-4620-9060039

REV —

DRAWING FILE # S I-4620-9060039

SHEET: 4 OF 4

REVISIONS				
ZONE	REV	DESCRIPTION	DATE	APPROVED
	A	CHANGED 2x4 J-BOX TO 4x4 w/ EXTENSION RING	10/18/99	KSL

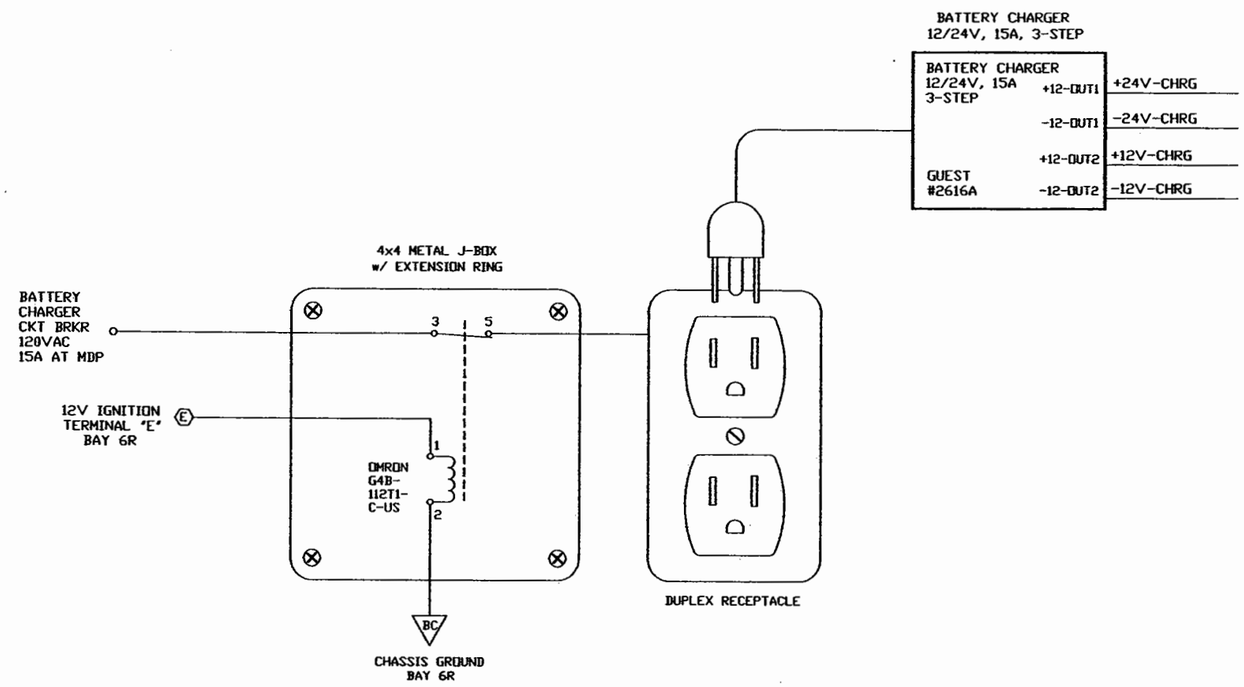

NEXT ASSY:	
WIRE LIST:	
PARTS LIST:	

UNLESS OTHERWISE SPECIFIED:
TOLERANCES:
.XX = ±
.XXX = ±
ANGLES = ±1°
DIMENSIONS ARE IN INCHES.
DO NOT SCALE DRAWING.

SIGNATURES		DATE
DRAWN	KSL	10/14/99
CHECKED		
ENGINEER		
ISSUED		
MATERIAL		
FINISH		

Vantare by Featherlite

SCHEMATIC, BATTERY CHARGER DISCONNECT RELAY

DRAWING NO. 9060040 REV. A

SCALE N/A FILE NO. 9060040 SHEET 1 OF 1

9060040

REVISIONS			
REV.	DESCRIPTION	DATE	APPROVAL
A	CHNGD THERMOSTAT CB35 (5 AMP) TO CB44 (10 AMP)	4/13/00	
B	CHNGD PINS ON TB1 IN AQUA-HOT ENCLOSURE.	07/21/00	T.DIXON
C	FORMAT, ADD MATING CONNECTORS, FIX RVAC WIRING, FIX AQHOT KAO2B LABEL	9/12/00	HAK
D	REMOVED RVAC DEFEAT SWITCH OPTION CHANGED RVAC THERMOSTAT WIRE COLORS FOR RVAC DEFEAT SEE DWG# 9060024A	6/14/01	KSL

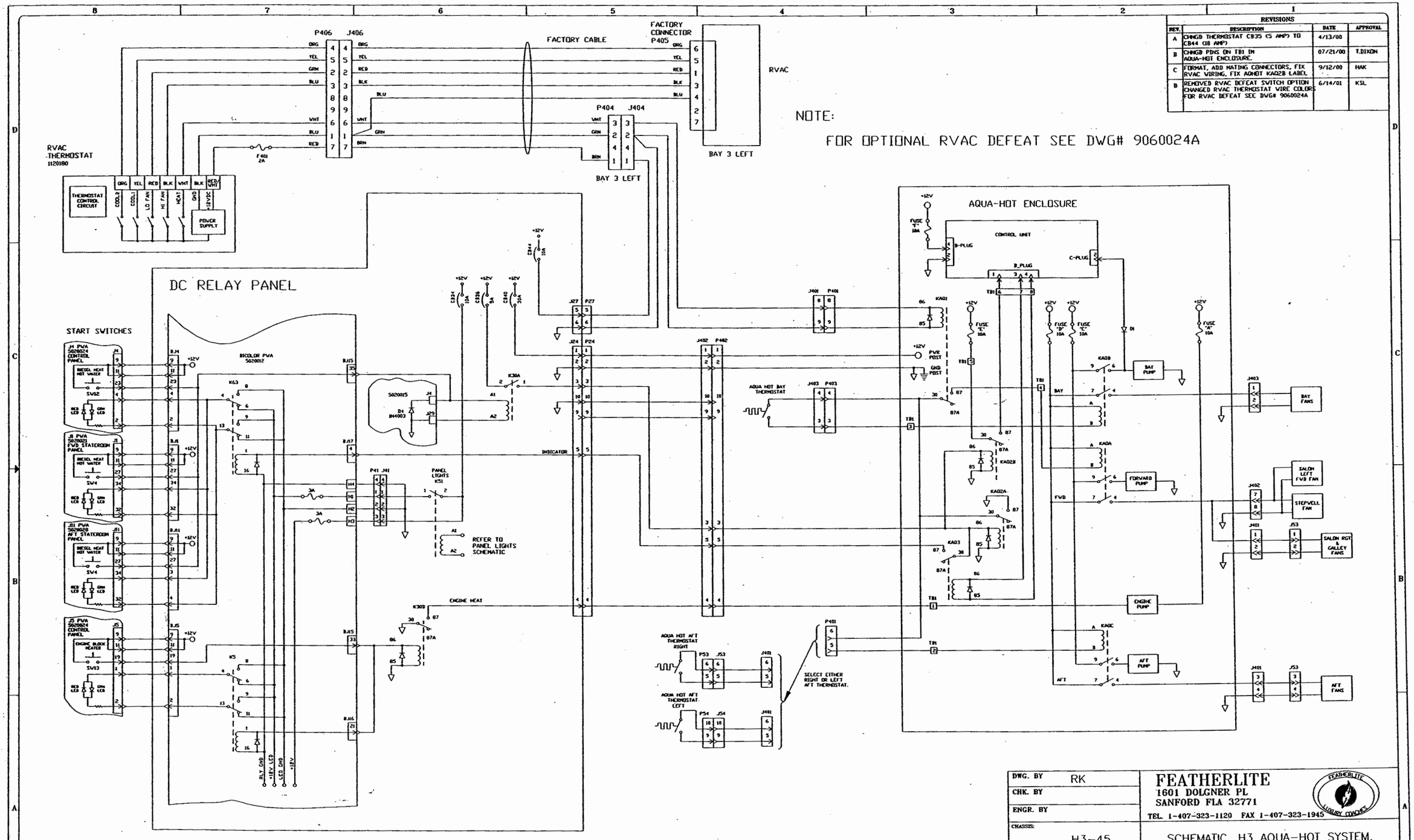

DWG. BY	RK
CHK. BY	
ENGR. BY	
CHASSIS:	H3-45
DATE :	12/10/99

FEATHERLITE
1601 DOLGNER PL
SANFORD FLA 32771
TEL. 1-407-323-1120 FAX 1-407-323-1945

SCHEMATIC, H3 AQUA-HOT SYSTEM, TUBING OUT ENCLOSURE FRONT

SCALE:	DRAWING NO.:	REV
NONE	9060041	D
	DRAWING FILE # 9060041C.DWG	SHEET 1 OF 1

CUSTOMER NAME:
CUSTOMER APPROVAL & DATE:

NOTE — INTERPRET ALL DRAWINGS IN ACCORDANCE WITH ANSI Y14.5-1982

NOTE: — SET PIN NUMBER FOR 2.4GHz HANDSET CORDLESS PHONES TO THE LAST FOUR NUMBERS OF THE COACH VIN

REVISIONS			
REV.	DESCRIPTION	DATE	APPROVAL
A			
B			
C			
D			

PHONE INTERFACE LOCATION

WIRE ROUTING SUPPORTS BOTH C-PHONE SYSTEM DIAGRAM SHOWN BELOW AND STANDARD CONFIGURATION CONNECT PER PAGE TWO OF THIS DRAWING

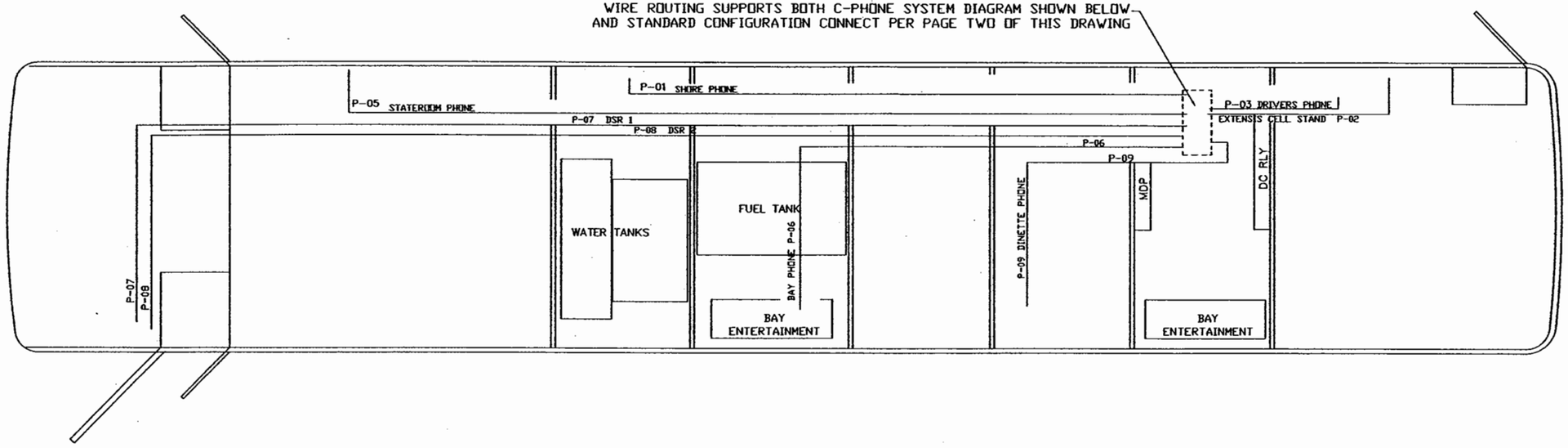

QTY	ITEM	PART NUMBER	DESCRIPTION	MATERIAL STOCK SIZE

DWG. BY KSS

CHK. BY 7/2/03

ENGR. BY M. FROHLICH

CHASSIS: H3 45-32

DATE : 7/30/03

PROPRIETARY NOTICE:

THIS DOCUMENT AND THE INFORMATION DISCLOSED ARE CONFIDENTIAL AND PROPRIETARY TO FEATHERLITE. DISCLOSURE OF SUCH INFORMATION IS EXPRESSLY FORBIDDEN WITHOUT OUR PRIOR WRITTEN PERMISSION

THIRD ANGLE PROJECTION

DO NOT SCALE DRAWING

TOLERANCES UNLESS OTHERWISE SPECIFIED:
ANGLES: ± 1/4°
FRACTIONS: ±1/64
DECIMALS: XX ±.010
DECIMALS: XXX ±.005

FEATHERLITE
1601 DOLGNER PL
SANFORD FLA 32771
TEL. 1-407-323-1120 FAX 1-407-323-1945

TITLE: PHONE INTERCONNECT LAYOUT

ITEM	MATERIAL FINISH

CUSTOMER NAME: SANIBEL I --NON-BUS AIR

CUSTOMER APPROVAL & DATE:

SCALE: N/A

DRAWING NO.: 4620-9060052

REV: —

DRAWING FILE # 4620-9060052

SHEET: 1 OF 2

NOTE — INTERPRET ALL DRAWINGS IN ACCORDANCE WITH ANSI Y14.5-1982

REVISIONS			
REV.	DESCRIPTION	DATE	APPROVAL
A			
B			
C			
D			

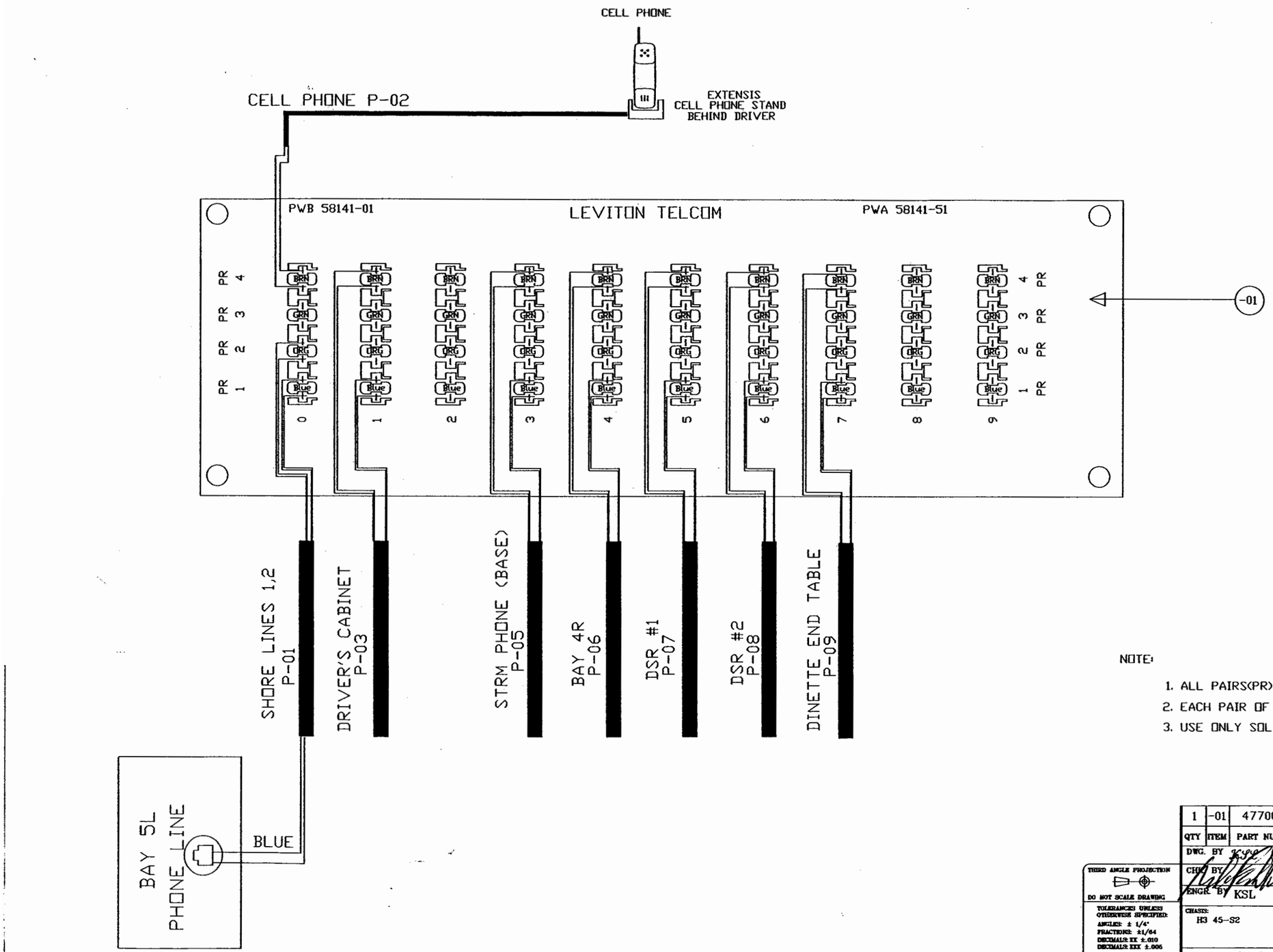

NOTE:

1. ALL PAIRS(PR) ARE THE EQUIVELANTE TO ONE PHONE LINE.
2. EACH PAIR OF WIRE HAS A SOLID & STRIPE COLOR WIRE.
3. USE ONLY SOLID WIRE OR TINNED STRANDED WIRE WITH PART 58141-51

QTY	ITEM	PART NUMBER	DESCRIPTION	MATERIAL STOCK SIZE
1	-01	4770003	1X9 BRIDGED TELEPHONE MODULE	Not Applicable

ITEM	MATERIAL FINISH

CUSTOMER NAME: SANIBEL I--NON-BUS AIR

CUSTOMER APPROVAL & DATE:

THIRD ANGLE PROJECTION

DO NOT SCALE DRAWING

TOLERANCES UNLESS OTHERWISE SPECIFIED:
ANGLES: ± 1/4°
FRACTIONS: ±1/64
DECIMALS: XX ±.010
DECIMALS: XXX ±.005

DWG. BY: KSG
CHK. BY: 8/28/03
ENGR. BY: KSL

CHASIS: H3 45-S2

DATE: 7/30/03

PROPRIETARY NOTICE:

THIS DOCUMENT AND THE INFORMATION DISCLOSED ARE CONFIDENTIAL AND PROPRIETARY TO FEATHERLITE. DISCLOSURE OF SUCH INFORMATION IS EXPRESSLY FORBIDDEN WITHOUT OUR PRIOR WRITTEN PERMISSION

FEATHERLITE
1601 DOLGNER PL
SANFORD FLA 32771
TEL 1-407-323-1120 FAX 1-407-323-1945

TITLE: PHONE INTERCONNECTION

SCALE: N/A

DRAWING NO.: 4620-9060052

DRAWING FILE #: 4620-9060052

SHEET: 2 OF 2

REV: —

REVISIONS			
REV.	DESCRIPTION	DATE	APPROVAL
–	ORIGINAL RELEASE	9/7/00	HAK
A	Changed wire colors Zones D6, B6	03/02/01	TED
B	Change the VCS trigger for Sal sconce light, & Ext Entry light to front door lock & unlock.	4/2/03	LMG
C	Change the color of 22 gauge wires in 12 conductor cable.	10/24/03	LMG

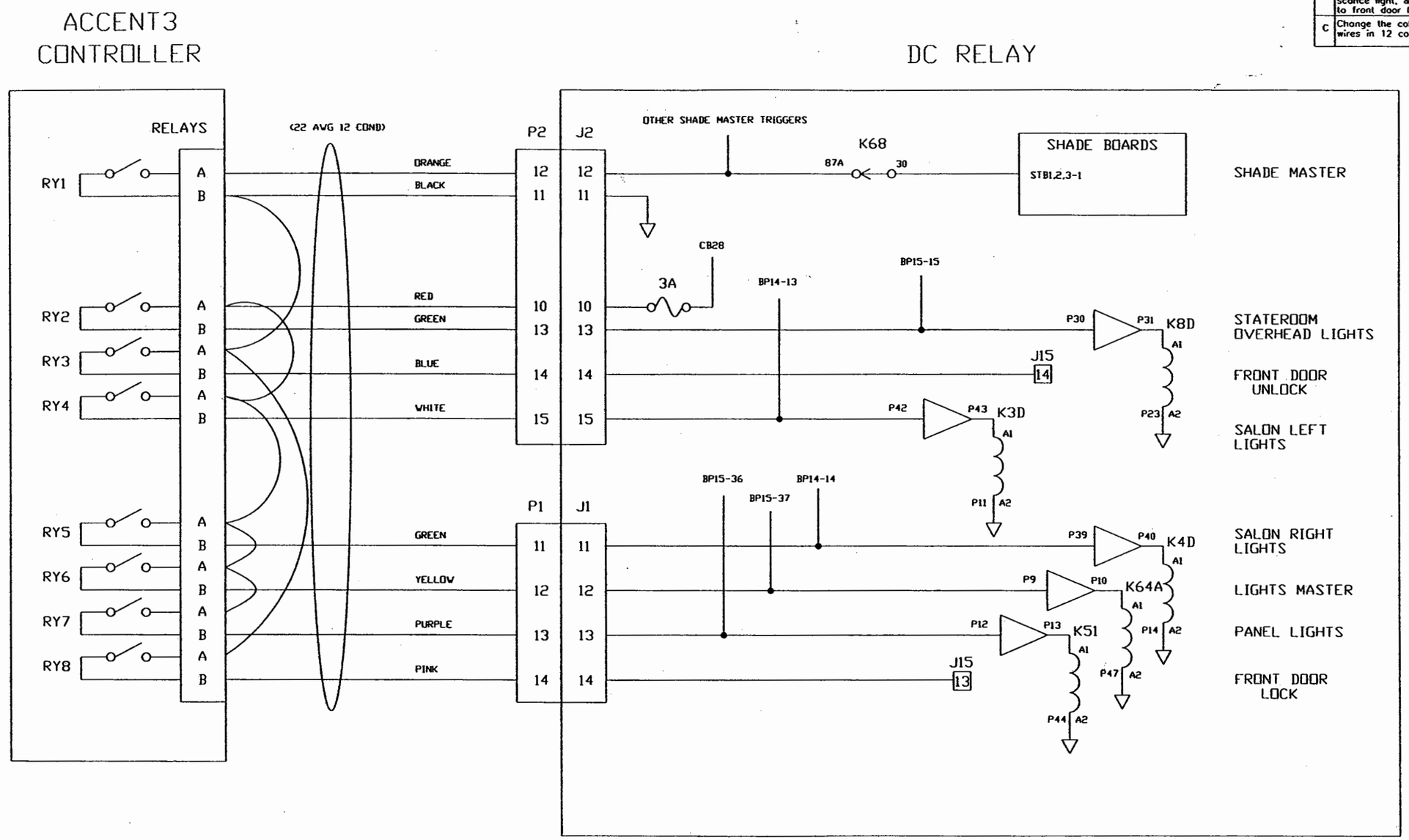

NOTES:
(1) SEE 9060005 FOR COMPLETE DC CIRCUIT SCHEMATICS
(2) SEE COACH-004 DRAWING FOR COMPLETE VCS SCHEMATIC
(3) SEE 9060014 FOR COMPLETE SHADES SCHEMATIC
(4) AVAILABLE WIRE COLORS WILL VARY BASED ON MANUFACTURER CHANGES

CUSTOMER NAME:
CUSTOMER APPROVAL & DATE:

DWG. BY: HAK
CHK. BY:
ENGR. BY: HAK
CHASSIS: H3-45
DATE: 9/7/00

FEATHERLITE
1601 DOLGNER PL
SANFORD FLA 32771
TEL. 1-407-323-1120 FAX 1-407-323-1945

SCHEMATIC, VCS RELAYS

SCALE: NONE
DRAWING NO.: 9060057
REV: C
DRAWING FILE #: 9060057B.DWG
SHEET: 1 OF 1

NOTE — INTERPRET ALL DRAWINGS IN ACCORDANCE WITH ANSI Y14.5-1982
1 REMOVE ALL SHARP EDGES

REVISIONS			
REV.	DESCRIPTION	DATE	APPROVAL
A	SEE PAGE #2	5/14/01	KSL
B	ADDED FUSES TO CPU	1/2/02	KSL
C			
D			

NOTES:

- SUPPLY +24VDC TO THE FOLLOWING INPUT & OUTPUT MODULE TERMINALS:

  INPUT MODULE: ROW 1, TERM. #18
  ROW 2, TERM. #17

  OUTPUT MODULE: ROW 1, TERM. #18
  ROW 2, TERM. #17 & #18

- SUPPLY -24VDC TO THE FOLLOWING INPUT & OUTPUT MODULE TERMINALS:

  INPUT MODULE: ROW 1, TERM. #17

  OUTPUT MODULE: ROW 1, TERM. #17
  ROW 3, TERM. #18

- ALL "JS" CONNECTORS ON THIS PAGE WITH THE EXCEPTION OF JS1A, JS2A, JS3, JS4, JS5, & JS17 ARE LOCATED AT RESPECTIVE DEVICES, NOT AT CPU.

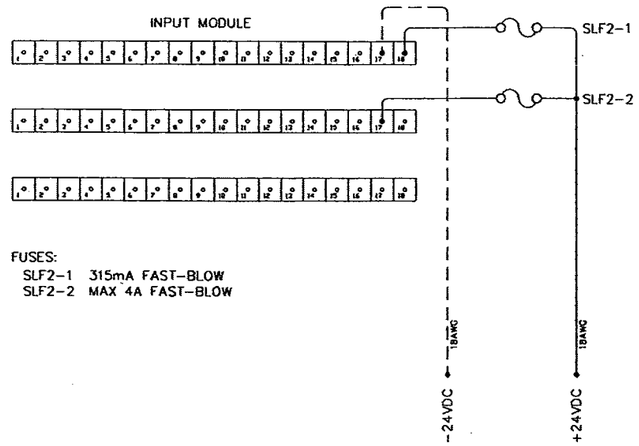

FUSES:
SLF2-1 315mA FAST-BLOW
SLF2-2 MAX 4A FAST-BLOW

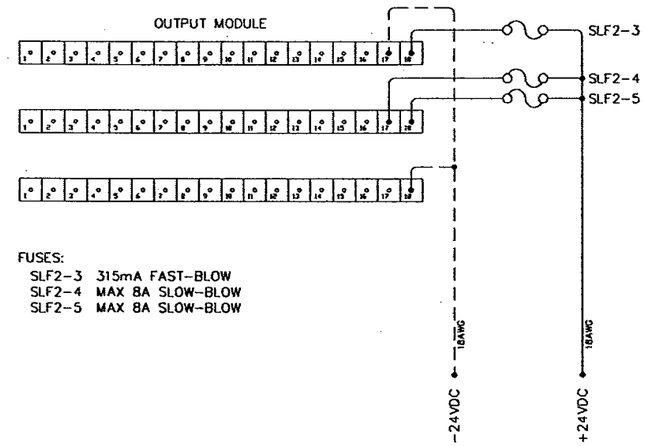

FUSES:
SLF2-3 315mA FAST-BLOW
SLF2-4 MAX 8A SLOW-BLOW
SLF2-5 MAX 8A SLOW-BLOW

CONNECTOR #	PINS:	PURPOSE:	CONDUCTORS:
JS1 & JS1A	6	ROOM 1 CONTROLLER	1-6 COND. 18AWG
JS2 & JS2A	6	ROOM 2 CONTROLLER	1-6 COND. 18AWG
JS3	12	LEVELING SYSTEM & PARKING BRAKE SIGNAL	1-12 COND. 18AWG
JS4	6	TRANSMISSION LOCK-OUT & "ROOM-IN-MOTION" ALARM	1-6 COND. 18AWG
JS5	15	ROOM 1 FWD. EXTEND/ RETRACT MOTOR	1-PAIR 12AWG YELLOW/BLACK @ ROOM 1 FWD. EXTEND/RETRACT MOTOR
		ROOM 1 AFT EXTEND/ RETRACT MOTOR	1-PAIR 12AWG YELLOW/BLACK @ ROOM 1 AFT EXTEND/RETRACT MOTOR
		ROOM 1 LOCK/UNLOCK MOTORS	1-PAIR 14AWG RED/BLACK @ EACH ROOM 1 LOCK/UNLOCK MOTOR
		ROOM 2 EXTEND/RETRACT MOTOR	1-PAIR 12AWG YELLOW/BLACK @ ROOM 2 EXTEND/RETRACT MOTOR
		ROOM 2 LOCK/UNLOCK MOTORS	1-PAIR 14AWG RED/BLACK @ EACH ROOM 2 LOCK/UNLOCK MOTOR
		RAISE/LOWER FWD. VERTICAL PANEL	1-PAIR 14AWG RED/BLACK @ FWD. VERTICAL PANEL MOTOR
		RAISE/LOWER AFT VERTICAL PANEL	1-PAIR 14AWG RED/BLACK @ AFT VERTICAL PANEL MOTOR
JS6	6	ROOM 1 LOCKED SENSOR (FWD. LOCK)	1-6 COND. 18AWG @ ROOM 1 FWD. LOCK
		ROOM 1 UNLOCKED SENSOR (FWD. LOCK)	SHARED w/ ROOM 1 LOCKED SENSOR (FWD. LOCK)
JS7	6	ROOM 1 LOCKED SENSOR (AFT LOCK)	1-6 COND. 18AWG @ ROOM 1 AFT LOCK
		ROOM 1 UNLOCKED SENSOR (AFT LOCK)	SHARED w/ ROOM 1 LOCKED SENSOR (AFT LOCK)
JS8	6	ROOM 2 LOCKED SENSOR (FWD. LOCK)	1-6 COND. 18AWG @ FWD. LOCK
		ROOM 2 UNLOCKED SENSOR (FWD. LOCK)	SHARED w/ ROOM 2 LOCKED SENSOR (FWD. LOCK)
JS9	6	ROOM 2 LOCKED SENSOR (AFT LOCK)	1-6 COND. 18AWG @ AFT LOCK
		ROOM 2 UNLOCKED SENSOR (AFT LOCK)	SHARED w/ ROOM 2 LOCKED SENSOR (AFT LOCK)
JS10	6	ROOM 1 FWD. MOTOR-SYNC SENSOR	1-6 COND. 18AWG @ ROOM 1 FWD. MOTOR-SYNC SENSOR
JS11	6	ROOM 1 AFT MOTOR-SYNC SENSOR	1-6 COND. 18AWG @ ROOM 1 AFT MOTOR-SYNC SENSOR

CONNECTOR #	PINS:	PURPOSE:	CONDUCTORS:
JS12A	2	ROOM 1 FWD. IN-LIMIT SWITCH	1-PAIR 16 AWG BLUE/BLACK @ ROOM 1 FWD. IN-LIMIT SWITCH
JS12B	2	ROOM 1 AFT IN-LIMIT SWITCH	1-PAIR 16 AWG BLUE/BLACK @ ROOM 1 AFT IN-LIMIT SWITCH
JS13A	2	ROOM 1 FWD. OUT-LIMIT SWITCH	1-PAIR 16 AWG BLUE/BLACK @ ROOM 1 FWD. OUT-LIMIT SWITCH
JS13B	2	ROOM 1 AFT OUT-LIMIT SWITCH	1-PAIR 16 AWG BLUE/BLACK @ ROOM 1 AFT OUT-LIMIT SWITCH
JS14	6	FWD. VERTICAL PANEL UP/DOWN-LIMIT SWITCHES	1-6 COND. 18 AWG @ FWD. VERTICAL PANEL UP/DOWN-LIMIT SWITCHES
JS15	6	AFT VERTICAL PANEL UP/DOWN-LIMIT SWITCHES	1-6 COND. 18 AWG @ AFT VERTICAL PANEL UP/DOWN-LIMIT SWITCHES
JS16	6	ROOM 2 IN/OUT LIMIT SWITCHES	1-6 COND. 18AWG @ ROOM 2 IN/OUT-LIMIT SWITCHES
JS17	4	SWITCHED OVERHEAD LIGHTS	2-PAIR 16 AWG TO DC RELAY PANEL (OVERHEAD LIGHTS RELAYS)
JS18	6	AUTO-LEVEL SWITCH RAISE/LOWER COACH SWITCH	1-6 COND. 18 AWG TO AUTO-LEVEL & RAISE/LOWER COACH SWITCH

HARDWARE LIST

ITEM	MATERIAL FINISH
1	ELECTRIC SLIDE-OUT CONTROLLER

CUSTOMER NAME:

CUSTOMER APPROVAL & DATE:

PRELIMINARY
THE INFORMATION CONTAINED ON THIS DRAWING IS PRELIMINARY AND IS FOR REVIEW AND EVALUATION PURPOSES ONLY NO PARTS ARE TO BE MANUFACTURED FROM THIS DRAWING

THIRD ANGLE PROJECTION
DO NOT SCALE DRAWING

TOLERANCES UNLESS OTHERWISE SPECIFIED:
ANGLES: ± 1/4°
FRACTIONS: ±1/64
DECIMALS: XX ±.010
DECIMALS: XXX ±.005

QTY	ITEM	PART NUMBER	DESCRIPTION	MATERIAL STOCK SIZE

DWG. BY K. Luglan
CHK. BY
ENGR. BY K. LUGLAN
CHASIS: H3-45-S2
DATE : 3/20/01

FEATHERLITE
1601 DOLGNER PL
SANFORD FLA 32771
TEL. 1-407-323-1120 FAX 1-407-323-1945

TITLE:
ELECTRIC SLIDE-OUT CONTROLLER
CPU POWER CONNECTIONS, HARNESS INFORMATION

PROPRIETARY NOTICE:
THIS DOCUMENT AND THE INFORMATION DISCLOSED ARE CONFIDENTIAL AND PROPRIETARY TO FEATHERLITE. DISCLOSURE OF SUCH INFORMATION IS EXPRESSLY FORBIDDEN WITHOUT OUR PRIOR WRITTEN PERMISSION

SCALE: N/A
DRAWING NO.: 9060067
REV B
DRAWING FILE # 9060067B
SHEET: 1 OF 5

NOTE — INTERPRET ALL DRAWINGS IN ACCORDANCE WITH ANSI Y14.5-1982
1 REMOVE ALL SHARP EDGES

REVISIONS			
REV.	DESCRIPTION	DATE	APPROVAL
A	RELOCATED PARKING BRAKE SIGNAL FROM 24-91C-1B TO 24-91-1B	5/14/01	KSL
B	SEE PAGE #1	1/2/02	KSL
C			
D			

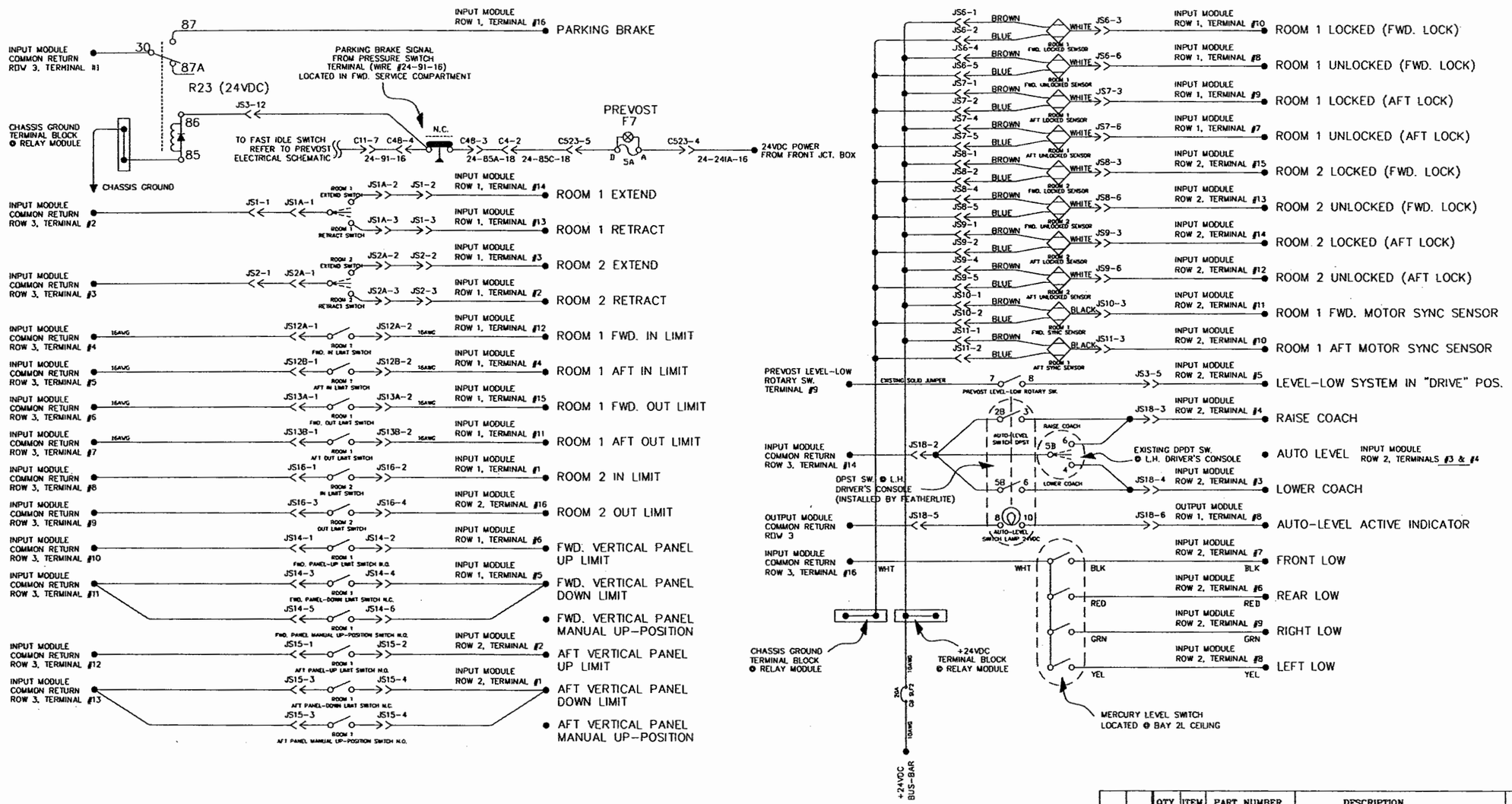

NOTE:
ALL WIRING RELATED TO THIS PAGE IS 18AWG UNLESS OTHERWISE NOTED

HARDWARE LIST

QTY	ITEM	PART NUMBER	DESCRIPTION	MATERIAL STOCK SIZE

PRELIMINARY
THE INFORMATION CONTAINED ON THIS DRAWING IS PRELIMINARY AND IS FOR REVIEW AND EVALUATION PURPOSES ONLY NO PARTS ARE TO BE MANUFACTURED FROM THIS DRAWING

ITEM	MATERIAL FINISH
	ELECTRIC SLIDE-OUT CONTROLLER

CUSTOMER NAME:
CUSTOMER APPROVAL & DATE:

THIRD ANGLE PROJECTION
DO NOT SCALE DRAWING
TOLERANCES UNLESS OTHERWISE SPECIFIED:
ANGLES: ± 1/4°
FRACTIONS: ±1/64
DECIMALS: XX ±.010
DECIMALS: XXX ±.005

DWG. BY K. Luglan
CHK. BY
ENGR. BY K. LUGLAN
CHASSIS: H3-45-S2
DATE : 3/20/01

PROPRIETARY NOTICE:
THIS DOCUMENT AND THE INFORMATION DISCLOSED ARE CONFIDENTIAL AND PROPRIETARY TO FEATHERLITE. DISCLOSURE OF SUCH INFORMATION IS EXPRESSLY FORBIDDEN WITHOUT OUR PRIOR WRITTEN PERMISSION

FEATHERLITE
1601 DOLGNER PL
SANFORD FLA 32771
TEL. 1-407-323-1120 FAX 1-407-323-1945

TITLE:
ELECTRIC SLIDE-OUT CONTROLLER
INPUTS TO CPU

SCALE: N/A
DRAWING NO.: 9060067
DRAWING FILE # 9060067B
SHEET: 2 OF 5
REV B

NOTE — INTERPRET ALL DRAWINGS IN ACCORDANCE WITH ANSI Y14.5-1982
1 REMOVE ALL SHARP EDGES

REVISIONS			
REV.	DESCRIPTION	DATE	APPROVAL
A	SEE PAGE #2	5/14/01	KSL
B	SEE PAGE #1	1/2/02	KSL
C			
D			

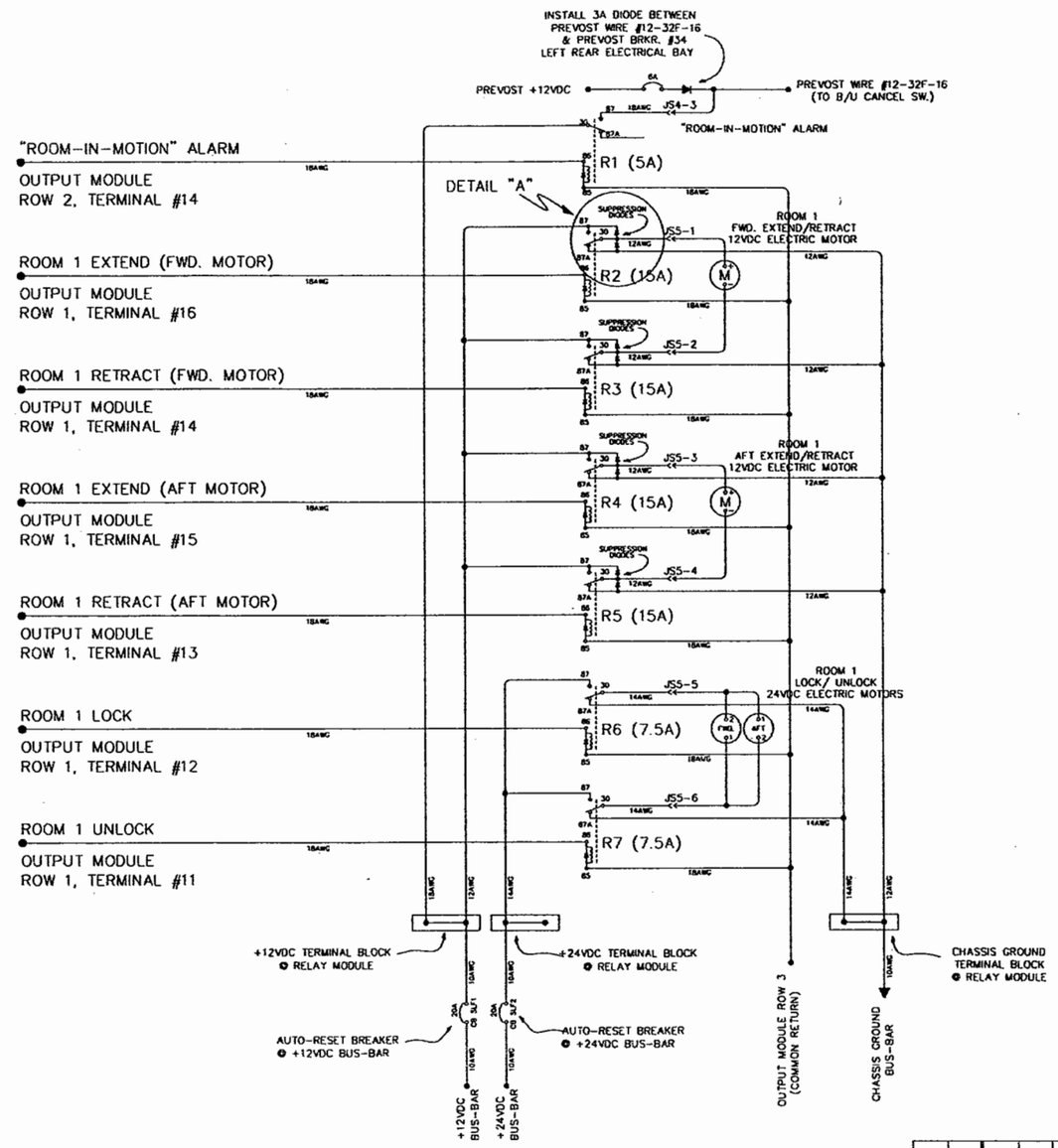

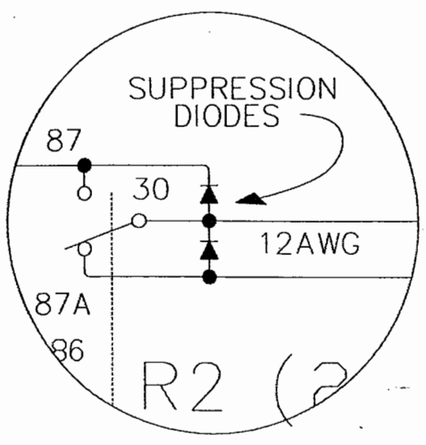

DETAIL "A"
(TYPICAL)

HARDWARE LIST

QTY	ITEM	PART NUMBER	DESCRIPTION	MATERIAL STOCK SIZE

DWG. BY K. Luglan
CHK. BY
ENGR. BY K. LUGLAN
CHASSIS: H3-45-S2
DATE : 3/20/01

THIRD ANGLE PROJECTION
DO NOT SCALE DRAWING

TOLERANCES UNLESS OTHERWISE SPECIFIED:
ANGLES: ± 1/4°
FRACTIONS: ±1/64
DECIMALS: XX ±.010
DECIMALS: XXX ±.005

PRELIMINARY
THE INFORMATION CONTAINED ON THIS DRAWING IS PRELIMINARY AND IS FOR REVIEW AND EVALUATION PURPOSES ONLY
NO PARTS ARE TO BE MANUFACTURED FROM THIS DRAWING

ITEM	MATERIAL FINISH
	ELECTRIC SLIDE-OUT CONTROLLER

CUSTOMER NAME:
CUSTOMER APPROVAL & DATE:

FEATHERLITE
1601 DOLGNER PL
SANFORD FLA 32771
TEL 1-407-323-1120 FAX 1-407-323-1945

TITLE:
ELECTRIC SLIDE-OUT CONTROLLER
RELAY MODULE

PROPRIETARY NOTICE:
THIS DOCUMENT AND THE INFORMATION DISCLOSED ARE CONFIDENTIAL AND PROPRIETARY TO FEATHERLITE. DISCLOSURE OF SUCH INFORMATION IS EXPRESSLY FORBIDDEN WITHOUT OUR PRIOR WRITTEN PERMISSION

SCALE: N/A
DRAWING NO.: 9060067
REV B
DRAWING FILE #: 9060067B
SHEET: 3 OF 5

NOTE — INTERPRET ALL DRAWINGS IN ACCORDANCE WITH ANSI Y14.5-1982
1 REMOVE ALL SHARP EDGES

REVISIONS			
REV.	DESCRIPTION	DATE	APPROVAL
A	SEE PAGE #2	5/14/01	KSL
B	SEE PAGE #1	1/2/02	KSL
C			
D			

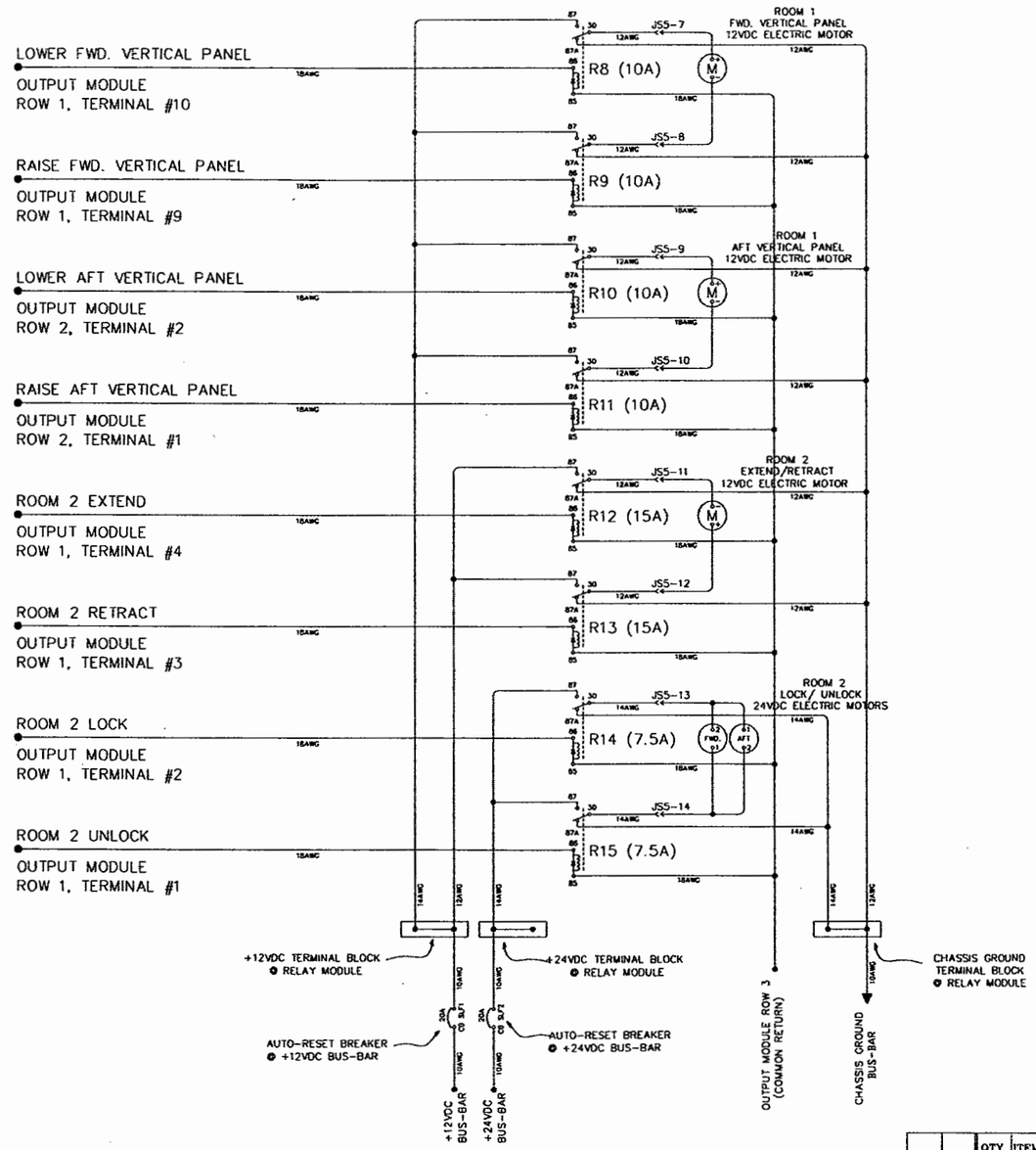

QTY	ITEM	PART NUMBER	DESCRIPTION	MATERIAL STOCK SIZE

THIRD ANGLE PROJECTION
DO NOT SCALE DRAWING

TOLERANCES UNLESS OTHERWISE SPECIFIED:
ANGLES: ± 1/4°
FRACTIONS: ±1/64
DECIMALS: XX ±.010
DECIMALS: XXX ±.005

PRELIMINARY
THE INFORMATION CONTAINED ON THIS DRAWING IS PRELIMINARY AND IS FOR REVIEW AND EVALUATION PURPOSES ONLY
NO PARTS ARE TO BE MANUFACTURED FROM THIS DRAWING

ITEM	MATERIAL FINISH
	ELECTRIC SLIDE-OUT CONTROLLER

CUSTOMER NAME:
CUSTOMER APPROVAL & DATE:

DWG. BY K. Luglan
CHK. BY
ENGR. BY K. LUGLAN
CHASIS: H3-45-S2
DATE : 3/20/01

PROPRIETARY NOTICE:
THIS DOCUMENT AND THE INFORMATION DISCLOSED ARE CONFIDENTIAL AND PROPRIETARY TO FEATHERLITE. DISCLOSURE OF SUCH INFORMATION IS EXPRESSLY FORBIDDEN WITHOUT OUR PRIOR WRITTEN PERMISSION

FEATHERLITE
1601 DOLGNER PL
SANFORD FLA 32771
TEL 1-407-323-1120 FAX 1-407-323-1945

TITLE:
ELECTRIC SLIDE-OUT CONTROLLER
RELAY MODULE

SCALE: N/A
DRAWING NO.: 9060067
DRAWING FILE # 9060067B
SHEET: 4 OF 5
REV B

HARDWARE LIST

NOTE — INTERPRET ALL DRAWINGS IN ACCORDANCE WITH ANSI Y14.5-1982
1 REMOVE ALL SHARP EDGES

REVISIONS			
REV.	DESCRIPTION	DATE	APPROVAL
A	SEE PAGE #2	5/14/01	KSL
B	SEE PAGE #1	1/2/02	KSL
C			
D			

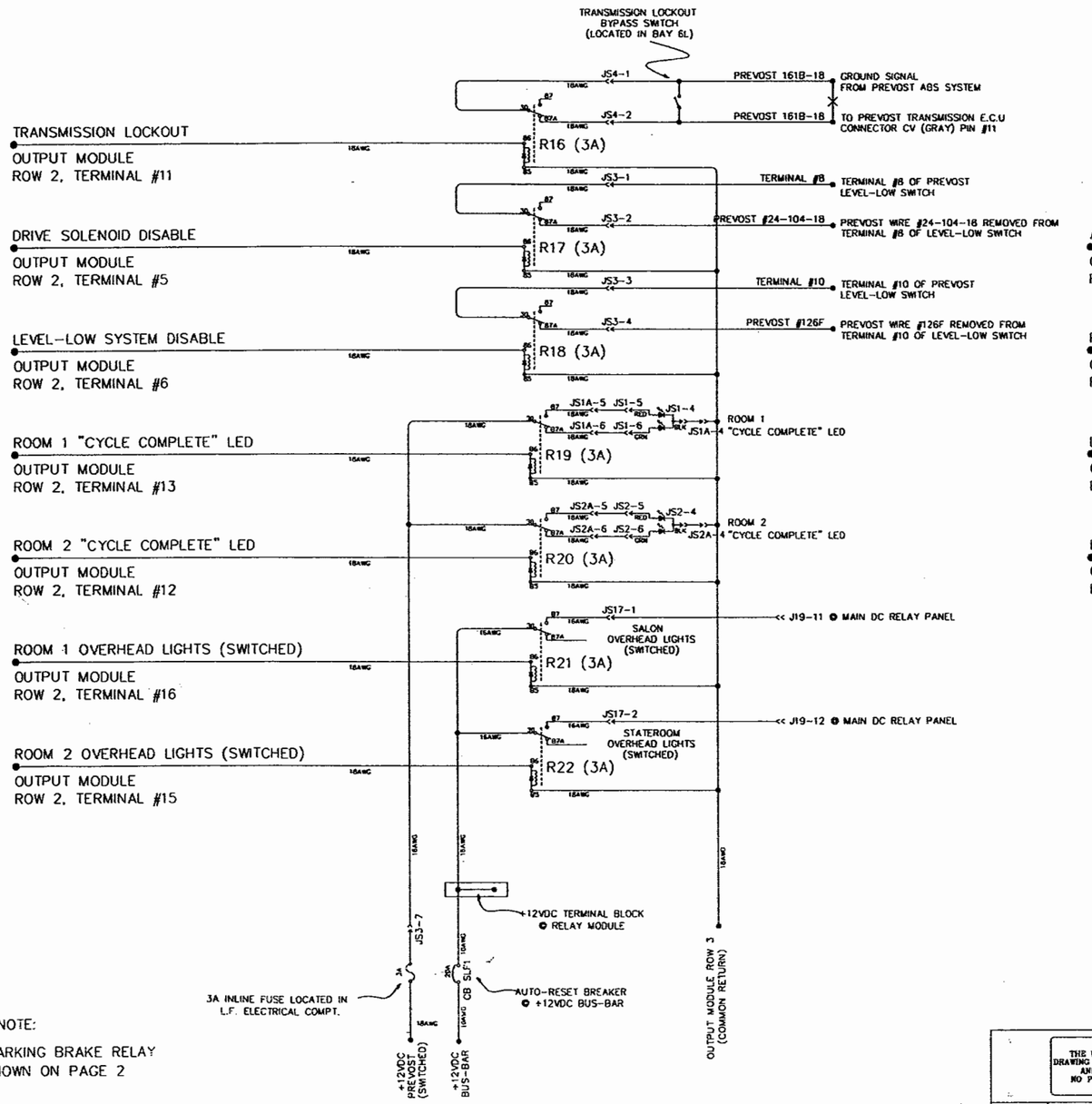

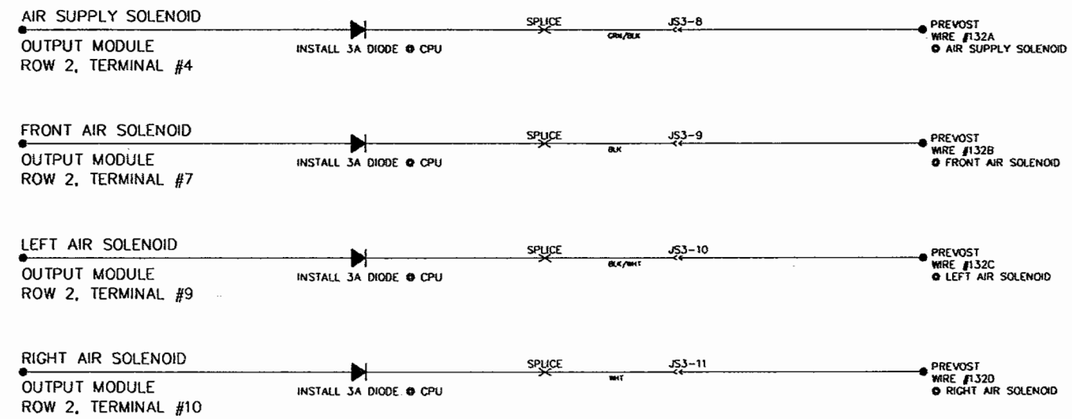

NOTE:

-PARKING BRAKE RELAY SHOWN ON PAGE 2

HARDWARE LIST

QTY	ITEM	PART NUMBER	DESCRIPTION	MATERIAL STOCK SIZE

PRELIMINARY
THE INFORMATION CONTAINED ON THIS DRAWING IS PRELIMINARY AND IS FOR REVIEW AND EVALUATION PURPOSES ONLY NO PARTS ARE TO BE MANUFACTURED FROM THIS DRAWING

ITEM	MATERIAL FINISH
	ELECTRIC SLIDE-OUT CONTROLLER

CUSTOMER NAME:

CUSTOMER APPROVAL & DATE:

THIRD ANGLE PROJECTION

DO NOT SCALE DRAWING

TOLERANCES UNLESS OTHERWISE SPECIFIED:
ANGLES: ± 1/4°
FRACTIONS: ±1/64
DECIMALS: XX ±.010
DECIMALS: XXX ±.005

DWG. BY K. Luglan
CHK. BY
ENGR. BY K. LUGLAN
CHASSIS: H3-45-S2
DATE : 3/20/01

PROPRIETARY NOTICE:
THIS DOCUMENT AND THE INFORMATION DISCLOSED ARE CONFIDENTIAL AND PROPRIETARY TO FEATHERLITE. DISCLOSURE OF SUCH INFORMATION IS EXPRESSLY FORBIDDEN WITHOUT OUR PRIOR WRITTEN PERMISSION

FEATHERLITE
1601 DOLGNER PL
SANFORD FLA 32771
TEL. 1-407-323-1120 FAX 1-407-323-1945

TITLE:
ELECTRIC SLIDE-OUT CONTROLLER
RELAY MODULE

SCALE: N/A
DRAWING NO.: 9060067
DRAWING FILE # 9060067B
SHEET: 5 OF 5
REV B

FORM: NOW-082096

NOTE — INTERPRET ALL DRAWINGS IN ACCORDANCE WITH ANSI Y14.5-1982
1 REMOVE ALL SHARP EDGES

REVISIONS			
REV.	DESCRIPTION	DATE	APPROVAL
A	SEE PAGE #2	5/14/01	KSL
B	SEE PAGE #1	1/2/02	KSL
C			
D			

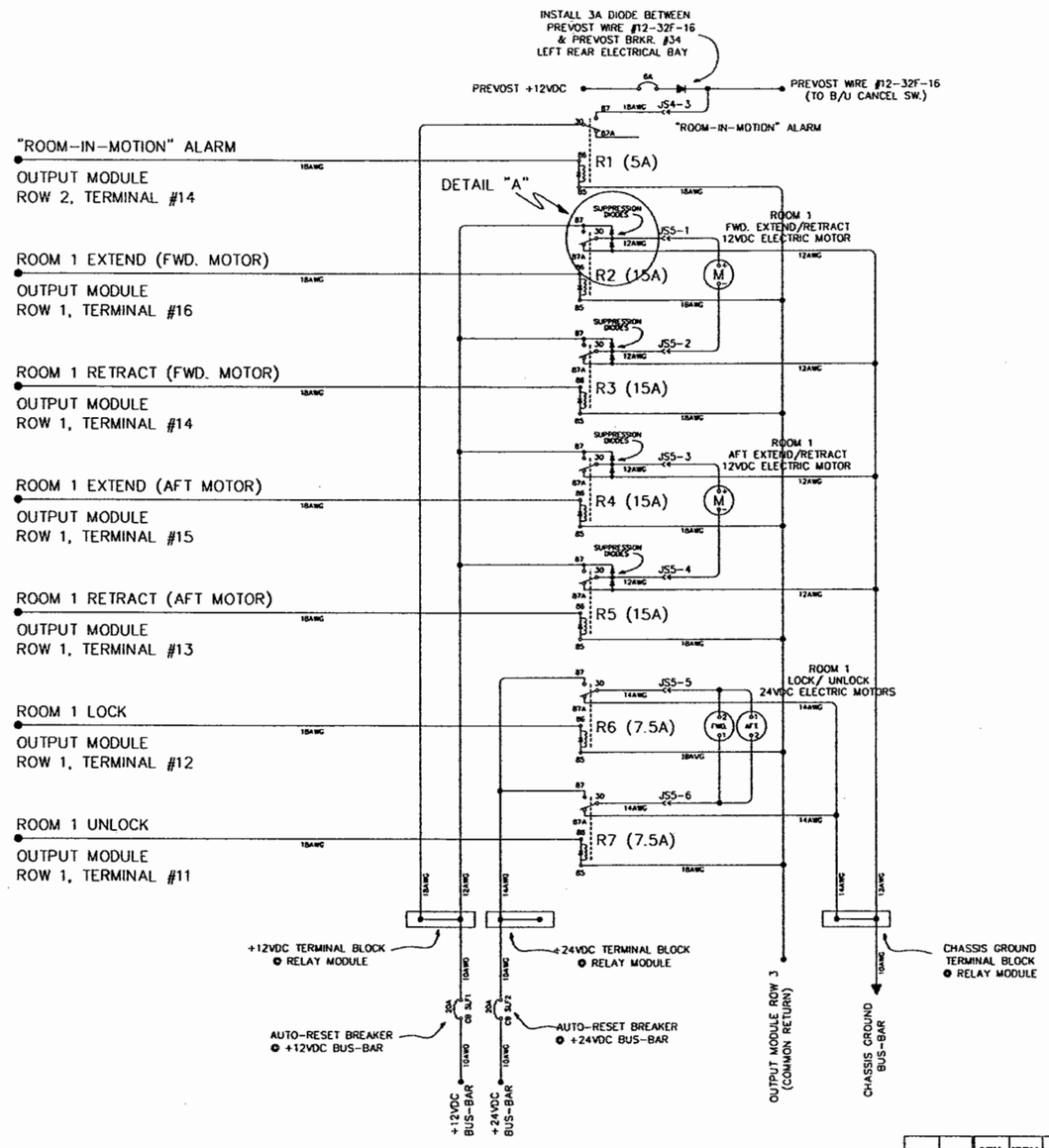

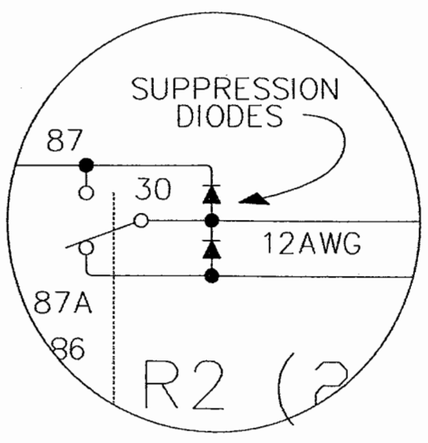

DETAIL "A"
(TYPICAL)

HARDWARE LIST

QTY	ITEM	PART NUMBER	DESCRIPTION	MATERIAL STOCK SIZE

DWG. BY K. Luglan
CHK. BY
ENGR. BY K. LUGLAN
CHASSIS: H3-45-S2
DATE : 3/20/01

THIRD ANGLE PROJECTION
DO NOT SCALE DRAWING
TOLERANCES UNLESS OTHERWISE SPECIFIED:
ANGLES: ± 1/4°
FRACTIONS: ±1/64
DECIMALS: XX ±.010
DECIMALS: XXX ±.005

PRELIMINARY
THE INFORMATION CONTAINED ON THIS DRAWING IS PRELIMINARY AND IS FOR REVIEW AND EVALUATION PURPOSES ONLY
NO PARTS ARE TO BE MANUFACTURED FROM THIS DRAWING

ITEM	MATERIAL FINISH
	ELECTRIC SLIDE-OUT CONTROLLER

CUSTOMER NAME:
CUSTOMER APPROVAL & DATE:

FEATHERLITE
1601 DOLGNER PL
SANFORD FLA 32771
TEL 1-407-323-1120 FAX 1-407-323-1945

TITLE:
ELECTRIC SLIDE-OUT CONTROLLER
RELAY MODULE

PROPRIETARY NOTICE:
THIS DOCUMENT AND THE INFORMATION DISCLOSED ARE CONFIDENTIAL AND PROPRIETARY TO FEATHERLITE. DISCLOSURE OF SUCH INFORMATION IS EXPRESSLY FORBIDDEN WITHOUT OUR PRIOR WRITTEN PERMISSION

SCALE: N/A
DRAWING NO.: 9060067
DRAWING FILE #: 9060067B
SHEET: 3 OF 5
REV B

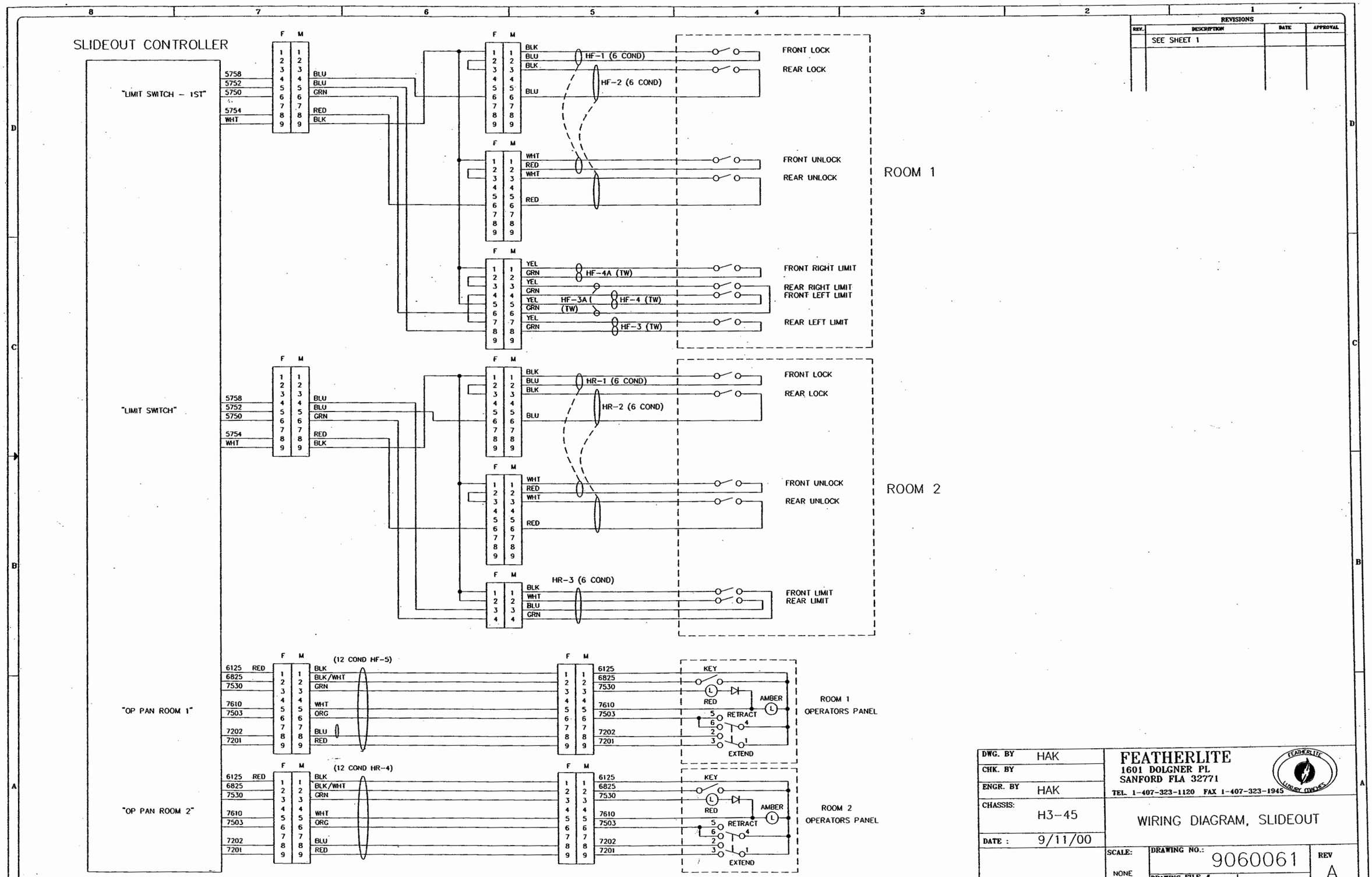

REVISIONS			
REV.	DESCRIPTION	DATE	APPROVAL
	SEE SHEET 1		

DWG. BY	HAK
CHK. BY	
ENGR. BY	HAK
CHASSIS:	H3-45
DATE :	9/11/00

FEATHERLITE
1601 DOLGNER PL
SANFORD FLA 32771
TEL. 1-407-323-1120 FAX 1-407-323-1945

WIRING DIAGRAM, SLIDEOUT

SCALE:	DRAWING NO.:	REV
NONE	9060061	A
	DRAWING FILE # 9060061A.DWG	SHEET: 2 OF 2

NOTE — INTERPRET ALL DRAWINGS IN ACCORDANCE WITH ANSI Y14.5-1982
1 REMOVE ALL SHARP EDGES

REVISIONS			
REV.	DESCRIPTION	DATE	APPROVAL
A	CHANGED PANASONIC SYSTEM TO PIONEER	9/3/03	
B			
C			
D			

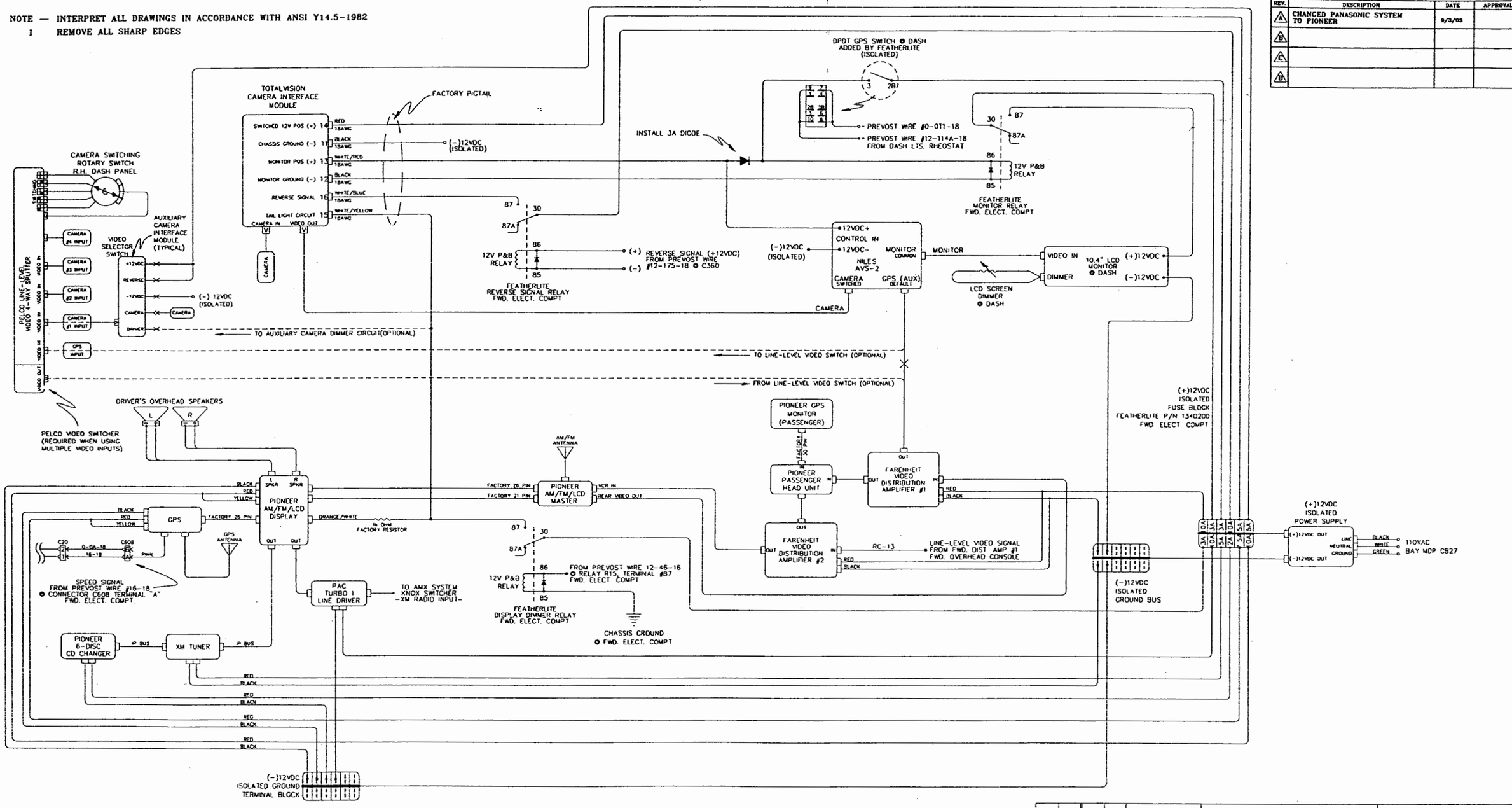

QTY	ITEM	PART NUMBER	DESCRIPTION	MATERIAL STOCK SIZE

DWG. BY K. Luglan
CHK. BY
ENGR. BY K. Luglan 10/20/03

THIRD ANGLE PROJECTION
DO NOT SCALE DRAWING
TOLERANCES UNLESS OTHERWISE SPECIFIED
ANGLES: ± 1/4°
FRACTIONS: ±1/64
DECIMALS: XX ±.010
DECIMALS: XXX ±.005

PRELIMINARY
THE INFORMATION CONTAINED ON THIS DRAWING IS PRELIMINARY AND IS FOR REVIEW AND EVALUATION PURPOSES ONLY NO PARTS ARE TO BE MANUFACTURED FROM THIS DRAWING

ITEM	MATERIAL FINISH
	DASH A/V w/PELCO 4-WAY SPLIT SCREEN

CUSTOMER NAME:

FEATHERLITE
1601 DOLGNER PL
SANFORD FLA 32771
TEL. 1-407-323-1120 FAX 1-407-323-1945

CHASSIS H3-45

DATE : 2/19/02

TITLE:
DASH A/V EQUIPMENT WIRING
ISOLATED POWER & A/V CONNECTIONS

PROPRIETARY NOTICE:
THIS DOCUMENT AND THE INFORMATION DISCLOSED ARE CONFIDENTIAL AND PROPRIETARY TO FEATHERLITE. DISCLOSURE OF SUCH INFORMATION IS EXPRESSLY FORBIDDEN WITHOUT OUR PRIOR WRITTEN PERMISSION

SCALE: N/A

DRAWING NO.: 9060089

REV A

DRAWING FILE # 9060089A

SHEET: 1 OF 1

HARDWARE LIST

LEVELING SYSTEM OPERATION

1) "AUTO-LEVEL" FUNCTION:

-THE "AUTO-LEVEL" FUNCTION IS FOR AUTOMATICALLY LEVELING THE COACH WHEN PARKED ONLY.

A) USING THE "AUTO-LEVEL" FUNCTION:

- THE PARKING BRAKE MUST BE SET.
- THE PREVOST IGNITION SWITCH MUST BE IN THE "ON" POSITION.
- THE PREVOST "LEVEL-LOW" ROTARY SWITCH MUST BE IN THE "OFF" POSITION.
- THE COACH ENGINE MUST BE RUNNING AT HIGH IDLE TO PROVIDE ADEQUATE AIR SUPPLY FOR RAISING THE COACH IF NEEDED.
- DEPRESS THE "AUTO-LEVEL" SWITCH AT LEFT-SIDE DRIVER'S CONSOLE. IF COACH IS NOT LEVEL, THE AUTO-LEVEL SYSTEM "ACTIVE" INDICATOR LAMP ON THE "AUTO-LEVEL" SWITCH WILL FLASH.
- AFTER 8 SECONDS, THE SYSTEM WILL RELEASE AIR FROM THE HIGH SIDE OR END OF THE COACH UNTIL THE COACH IS LEVEL, AT WHICH TIME THE AUTO-LEVEL SYSTEM "ACTIVE" INDICATOR LAMP ON THE "AUTO-LEVEL" SWITCH WILL GO OUT.
- IF AFTER 40 SECONDS LEVELING IS NOT ACHIEVED, THE SYSTEM WILL RAISE THE LOW SIDE OR END OF THE COACH UNTIL THE COACH IS LEVEL. THE AUTO-LEVEL SYSTEM "ACTIVE" INDICATOR LAMP ON THE "AUTO-LEVEL" SWITCH WILL THEN GO OUT.

NOTE:

IF AFTER 5 MINUTES LEVELING IS NOT ACHIEVED, THE AUTO-LEVEL "ACTIVE" INDICATOR LAMP WILL FLASH RAPIDLY. THIS INDICATES THAT THE COACH IS ON AN EXCESSIVE SLOPE AND MUST BE MOVED TO A MORE SUITABLE, LEVEL LOCATION.

NOTE: THE "AUTO-LEVEL" FUNCTION IS OVERIDDEN WHEN:

1) THE "AUTO-LEVEL" SWITCH IS IN THE "OFF" POSITION
2) THE PREVOST IGNITION SWITCH IS IN THE "OFF" POSITION
3) THE PARKING BRAKE IS RELEASED
4) THE PREVOST "LEVEL-LOW" ROTARY SWITCH IS NOT IN THE "OFF" POSITION.

LEVELING SYSTEM OPERATION (CONT.)

2) "RAISE / LOWER" COACH FUNCTIONS:

-THE "RAISE / LOWER" COACH SWITCH IS USED TO RAISE OR LOWER ALL FOUR CORNERS OF THE COACH, EITHER SIMULTANEOUSLY OR INDIVIDUALLY, IN CASES WHERE VERTICAL CLEARANCE IS MINIMAL. OBSTACLES SUCH AS LOW OVERPASSES OR TREE BRANCHES, ROUGH DRIVEWAYS AND RAILROAD TRACKS MAY BE AVOIDED WITH THE USE OF THIS FEATURE.

A) USING THE "RAISE COACH" FUNCTION:

1) TO RAISE ALL FOUR CORNERS OF COACH SIMULTANEOUSLY:

- THE COACH ENGINE MUST BE RUNNING AT HIGH IDLE TO PROVIDE ADEQUATE AIR SUPPLY.
- THE PREVOST "LEVEL-LOW" ROTARY SWITCH MUST BE IN THE "OFF" POSITION.
- IF THE PARKING BRAKE IS SET, THE "AUTO-LEVEL" SYSTEM SWITCH MUST BE IN THE "OFF" POSITION.
- DEPRESSING THE "RAISE COACH" SWITCH WILL RAISE ALL FOUR CORNERS OF THE COACH SIMULTANEOUSLY FOR AS LONG AS THE SWITCH IS DEPRESSED OR UNTIL THE AIRBAGS ARE FULL.
- THE COACH WILL RETURN TO TRAVEL HEIGHT WHEN THE "RAISE" COACH SWITCH IS RELEASED.

2) TO RAISE AN INDIVIDUAL SIDE OR END OF THE COACH:

- THE COACH ENGINE MUST BE RUNNING AT HIGH IDLE TO PROVIDE ADEQUATE AIR SUPPLY.
- WITH THE PREVOST "LEVEL-LOW" ROTARY SWITCH IN THE "LEFT", "FRONT", OR "RIGHT" POSITIONS, DEPRESSING THE "RAISE" COACH SWITCH WILL RAISE THE RESPECTIVE SIDE OR END OF THE COACH FOR AS LONG AS THE SWITCH IS DEPRESSED OR UNTIL THE RESPECTIVE AIR BAGS ARE FULL.
- THIS FEATURE IS OPERABLE AT ALL TIMES, EVEN WHEN THE "AUTO LEVEL" SYSTEM IS ENABLED.

THE COACH WILL STAY AT THE ADJUSTED HEIGHT UNTIL THE PREVOST "LEVEL-LOW" ROTARY SWITCH IS RETURNED TO THE "OFF" POSITION.

AT THIS TIME THE COACH WILL EITHER RETURN TO TRAVEL HEIGHT (IF THE "AUTO-LEVEL" SYSTEM SWITCH IS IN THE "OFF" POSITION OR THE PARKING BRAKE IS NOT SET)

-OR-

THE COACH WILL AUTOMATICALLY LEVEL (IF THE "AUTO-LEVEL" SYSTEM SWITCH IS IN THE "ON" POSITION AND THE PARKING BRAKE IS SET).

LEVELING SYSTEM OPERATION (CONT.)

2) "RAISE / LOWER" COACH FUNCTIONS: (CONT.)

B) USING THE "LOWER COACH" FUNCTION:

1) TO LOWER ALL FOUR CORNERS OF COACH SIMULTANEOUSLY:

- THE PREVOST IGNITION SWITCH MUST BE IN THE "ON" POSITION.
- THE PREVOST "LEVEL-LOW" ROTARY SWITCH MUST BE IN THE "OFF" POSITION.
- IF THE PARKING BRAKE IS SET, THE "AUTO-LEVEL" SYSTEM SWITCH MUST BE IN THE "OFF" POSITION.
- DEPRESSING THE "LOWER COACH" SWITCH WILL LOWER ALL FOUR CORNERS OF THE COACH SIMUTANEOUSLY FOR AS LONG AS THE SWITCH IS DEPRESSED OR UNTIL THE AIRBAGS ARE EMPTY.
- THE COACH WILL RETURN TO TRAVEL HEIGHT WHEN THE "LOWER" COACH SWITCH IS RELEASED.

2) TO LOWER AN INDIVIDUAL SIDE OR END OF THE COACH:

- THE PREVOST IGNITION SWITCH MUST BE IN THE "ON" POSITION.
- WITH THE PREVOST "LEVEL-LOW" ROTARY SWITCH IN THE "LEFT", "FRONT", OR "RIGHT" POSITIONS, DEPRESSING THE "LOWER" COACH SWITCH WILL LOWER THE RESPECTIVE SIDE OR END OF THE COACH FOR AS LONG AS THE SWITCH IS HELD OR UNTIL THE RESPECTIVE AIR BAGS ARE EMPTY.
- THIS FEATURE IS OPERABLE AT ALL TIMES, EVEN WHEN THE "AUTO LEVEL" SYSTEM IS ENABLED.

THE COACH WILL STAY AT THE ADJUSTED HEIGHT UNTIL THE PREVOST "LEVEL-LOW" ROTARY SWITCH IS RETURNED TO THE "OFF" POSITION.

AT THIS TIME THE COACH WILL EITHER RETURN TO TRAVEL HEIGHT (IF THE "AUTO-LEVEL" SYSTEM SWITCH IS IN THE "OFF" POSITION OR THE PARKING BRAKE <u>IS NOT</u> SET)

-OR-

THE COACH WILL AUTOMATICALLY LEVEL (IF THE "AUTO-LEVEL" SYSTEM SWITCH IS IN THE "ON" POSITION <u>AND</u> THE PARKING BRAKE <u>IS</u> SET).

NOTE: THE "RAISE/LOWER" COACH SWITCH IS OVERIDDEN WHEN:

A) THE AUTO-LEVEL SYSTEM SWITCH IS IN THE "ON" POSITION <u>AND</u> THE PARKING BRAKE IS SET

B) THE PREVOST IGNITION SWITCH IS IN THE "OFF" POSITION.

LEVELING SYSTEM OPERATION (CONT.)

3) USE OF PREVOST "LEVEL-LOW" ROTARY SWITCH:

A) FOR NORMAL DRIVING, TURN THE PREVOST "LEVEL-LOW" ROTARY SWITCH TO THE "OFF" POSITION.

B) TO RAISE OR LOWER THE FRONT END OF THE COACH, TURN THE PREVOST "LEVEL-LOW" ROTARY SWITCH TO THE "FRONT" POSITION AND DEPRESS "RAISE" OR "LOWER" COACH SWITCH.

C) TO RAISE OR LOWER THE RIGHT SIDE OF THE COACH, TURN THE PREVOST "LEVEL-LOW" ROTARY SWITCH TO THE "RIGHT" POSITION AND DEPRESS "RAISE" OR "LOWER" COACH SWITCH.

D) TO RAISE OR LOWER THE LEFT SIDE OF THE COACH, TURN THE PREVOST "LEVEL-LOW" ROTARY SWITCH TO THE"LEFT" POSITION AND DEPRESS "RAISE" OR "LOWER" COACH SWITCH.

ELECTRIC SLIDE-OUT SYSTEM OPERATION

1) TO EXTEND ROOM:

A) MAKE SURE THE ROOMS ARE CLEAR INSIDE AND OUT, AWNINGS OVER ROOMS ARE RETRACTED, AND THE COACH IS LEVEL.

B) MAKE SURE THE PARKING BRAKE IS SET.

C) TURN THE PREVOST BATTERY SWITCH TO THE "ON" POSITION.

D) TURN AND HOLD THE "ROOM IN / ROOM OUT" SWITCH ON THE SLIDE-OUT CONTROL PANEL TO THE "ROOM OUT" POSITION. THE "CYCLE COMPLETE" INDICATOR LED ON THE SLIDE-OUT CONTROL PANEL WILL THEN TURN FROM GREEN TO RED.

E) HOLD THE "ROOM IN / ROOM OUT" SWITCH IN THE "ROOM OUT" POSITION UNTIL ROOM IS OUT AND THE "CYCLE COMPLETE" INDICATOR LED TURNS FROM RED BACK TO GREEN.

F) RELEASE THE "ROOM IN / ROOM OUT" SWITCH.

G) THE PREVOST BATTERY SWITCH MAY NOW BE TURNED "OFF" AND AWNINGS OVER ROOMS MAY BE EXTENDED IF DESIRED.

NOTE: THE COACH IS NOT DRIVEABLE WHEN THE ROOMS ARE OUT.
THE TRANSMISSION IS DISABLED AND WILL NOT GO IN TO GEAR.

2) TO RETRACT ROOM:

A) MAKE SURE THE ROOMS ARE CLEAR INSIDE AND OUT, AWNINGS OVER ROOMS ARE RETRACTED, AND THE COACH IS LEVEL.

B) MAKE SURE THE PARKING BRAKE IS SET.

C) TURN THE PREVOST BATTERY SWITCH TO THE "ON" POSITION.

D) TURN AND HOLD THE "ROOM IN / ROOM OUT" SWITCH ON THE SLIDE-OUT CONTROL PANEL TO THE "ROOM IN" POSITION. THE "CYCLE COMPLETE" INDICATOR LED ON THE SLIDE-OUT CONTROL PANEL WILL THEN TURN FROM GREEN TO RED.

E) HOLD THE "ROOM IN / ROOM OUT" SWITCH IN THE "ROOM IN" POSITION UNTIL THE ROOM IS IN AND THE "CYCLE COMPLETE" INDICATOR TURNS FROM RED BACK TO GREEN.

F) RELEASE THE "ROOM IN / ROOM OUT" SWITCH.

G) THE PREVOST BATTERY SWITCH MAY NOW BE TURNED "OFF" AND AWNINGS OVER ROOMS MAY BE EXTENDED IF DESIRED.

ELECTRIC SLIDE-OUT SYSTEM OPERATION (CONT.)

3) MANUAL OPERATION OF VERTICAL PANELS:

-THE VERTICAL PANELS AT THE FORWARD AND AFT ENDS OF THE SALON SLIDE-OUT ARE MANUALLY-RETRACTABLE IN CASE OF A MECHANICAL FAILURE OR FOR CONVENIENCE PURPOSES SUCH AS LOADING OR UNLOADING THE LEFT-SIDE BAYS OF THE COACH.

A) TO MANUALLY RAISE VERTICAL PANELS:

1) WITH THE SALON SLIDE-OUT EXTENDED, DISCONNECT THE LATCHING MECHANISM ON THE VERTICAL PANEL CABLE-DRIVE BY LIFTING UP ON THE PANEL TO BE RETRACTED.

2) LIFT THE PANEL UP TO WITHIN APPROXIMATELY 1 INCH OF THE BOTTOM OF THE SLIDE-OUT, THEN QUICKLY SNAP PANEL UP INTO THE POCKET TO LATCH IT IN PLACE.

NOTE:

-WITH THE VERTICAL PANELS IN THE "MANUAL-UP" POSITION, THE ROOM 1"CYCLE COMPLETE" INDICATOR LED ON THE ROOM 1 CONTROL PANEL WILL REMAIN "RED". THIS WILL NOT AFFECT THE OPERATION OF THE SLIDE-OUT SYSTEM. HOWEVER, CARE MUST BE TAKEN WHEN EXTENDING THE ROOM TO MAKE SURE THAT THE ROOM LOCKS ENGAGE COMPLETELY AFTER EXTENDING. THE LOCKS ARE COMPLETELY ENGAGED WHEN THE LOCK MOTORS STOP AND CAN NO LONGER BE HEARD.

B) TO RETRIEVE VERTICAL PANELS WHEN IN THE "MANUAL-UP" POSITION:

1) EXTEND SALON SLIDE-OUT BY FOLLOWING THE PREVIOUS INSTRUCTIONS *(ELECTRIC SLIDE-OUT SYSTEM OPERATION, STEP 1, "TO EXTEND ROOM")*.

2) AFTER THE ROOM IS EXTENDED, CONTINUE HOLDING THE "ROOM IN / ROOM OUT SWITCH IN THE "ROOM OUT" POSITION FOR APPROXIMATELY 20 SECONDS UNTIL THE VERTICAL PANELS COME DOWN AND THE "CYCLE COMPLETE" INDICATOR LED TURNS FROM RED TO GREEN.

3) THE SLIDE-OUT SYSTEM WILL THEN OPERATE NORMALLY.